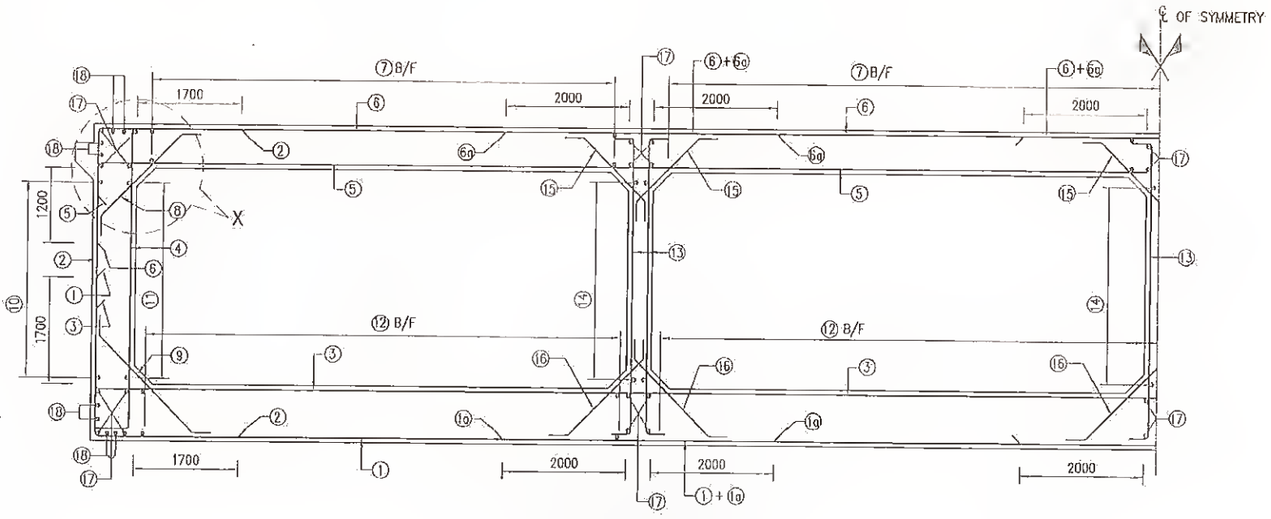

REINFORCEMENT DETAILS
SCALE 1:100

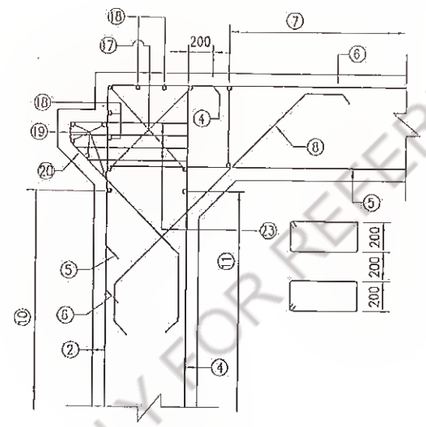

DETAIL-X
SCALE 1:50

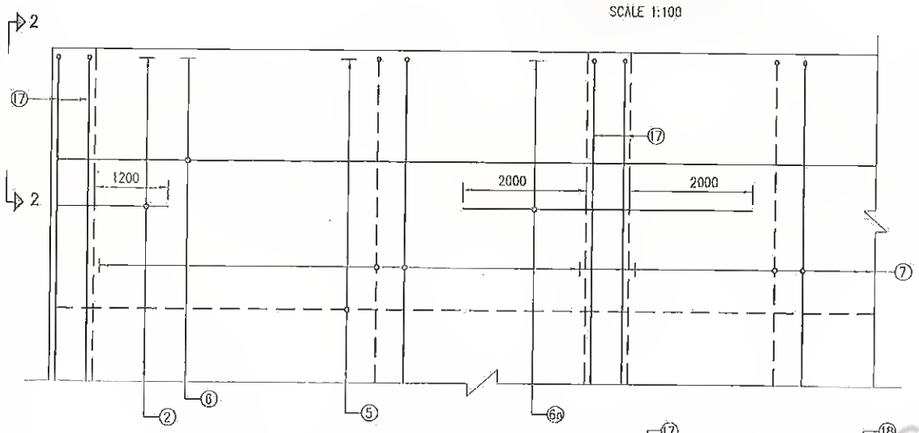

TOP SLAB R/F PLAN
SCALE 1:100

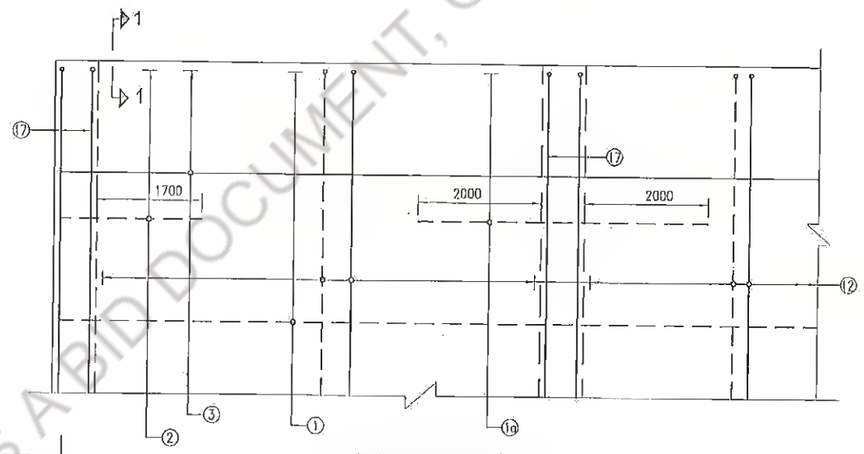

BOTTOM SLAB R/F PLAN
(HAUNCH LINES NOT SHOWN IN PLAN)
SCALE 1:100

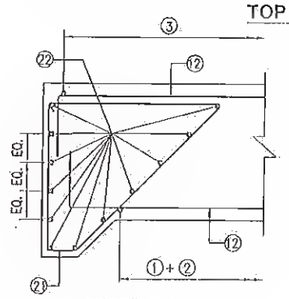

SECTION 1-1
SCALE 1:50

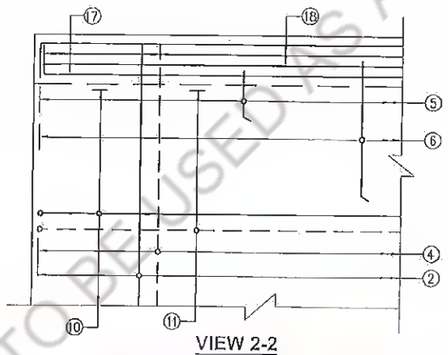

VIEW 2-2
HAUNCH LINES NOT SHOWN
SCALE 1:100

SCHEDULE OF REINFORCEMENT

BAR MARK	SHAPE OF BARS (NOT TO SCALE) / BOX-CELL DESIGNATION	BAR DIA	SPACING IN MM/NO. OF BARS	M1	M2
①	M1 M2 M1	20	200	2525	34450
①a	M2	10	200	–	4400
②	M2 M1 M1	20	200	2325	7045
③	M1 M2 M1	20	200	1500	34450
	M1 M2 M1	16	200	1500	34450
④	M1 M1 M2	12	100	600	7045
⑤	M1 M2 M1	16	100	300	34450
⑥	M1 M2 M1	16	200	2350	34450
⑥a	M2	16	200	–	4400
⑦	M2	12	180	–	11900
⑧	M2 M1 M1	12	200	300	2050
⑨	M1 M2 M1	12	200	300	2350
⑩	M1 M2 M1	12	180	150	11900
⑪	M1 M2 M1	12	180	150	6075
⑫	M2	12	150	–	11900
⑬	M1 M1 M2	16	200	300	7045
⑭	M1 M2 M1	12	100	150	11900
⑮	M2 M1 M1	12	200	300	2050
⑯	M1 M2 M1	12	200	300	2350
⑰	M2	16	20 NOS.	–	11900
⑱	M2	12	8 NOS.	–	11900
⑲	M2	12	5 NOS.	–	11900
⑳	700 200 300	12	100	–	–
㉑	M1+0.2 M1 135° M2	12	150	–	–
㉒	M2	10	12 NOS.	–	17650
㉓	M1 M2 2 LEGGED STIRRUPS	10	3-LAYERS	400	VARIES

TOTAL QUANTITY OF STEEL = 42.330 TONS.

LEGEND
BF/FF
TF/RF

NOTES:
1. ALL DIMENSIONS ARE IN MILLIMETRES AND LEVELS ARE IN METRES UNLESS OTHERWISE SPECIFIED.
2. DIMENSIONS ARE NOT TO BE SCALED ONLY WRITTEN DIMENSIONS SHALL BE FOLLOWED.

REFERENCE DRAWINGS :
a). GENERAL NOTES.....HOL/BSRDCL/13510/FDDPR/MISC/01
b). GAD.....HOL/BSRDCL/13510/FDDPR/BR-5/01

Revision					
Rev.	Date	Description	Drawn	Checked	Approved

Client: Bihar State Road Development Corporation Ltd. PIU, Nawada
DGM (Tech) Bihar State Road Dev. Corp. Ltd.

Project Title : CONSULTANCY SERVICES FOR PREPARATION OF DETAILED PROJECT REPORT (DPR) FOR SH-103 (MANGHWE- GOVINDPUR)

Consultant: HOLTEC CONSULTING PRIVATE LIMITED
HOLTEC CENTRE, A BLOCK, SHRESHTHA VIHAR, SHASTRI NAGAR, NOIDA
PHONE : 0120-2385095, 2385096, FAX 0120-2385114, 2385116

Designed	Checked	Approved
SUD	SUD	RKR
Drawn: SSH	Scale: AS SHOWN	Date: OCT. 2018

Title : REINFORCEMENT DETAILS OF 4X8.0 M SPAN BOX AT CH: KM. 17+605

Drawing No. HOL/BSRDCL/13510/DPR/BR-5/02 | Rev. 0 | Sheet 1

CAD File Ref : HOL/BSRDCL/13510/DPR/BR-5/02 | A3

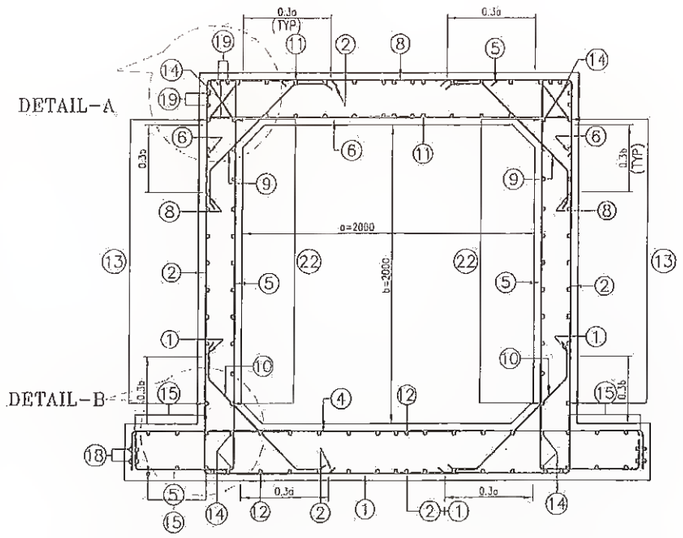

REINFORCEMENT DETAILS OF SINGLE CELL BOX CULVERT

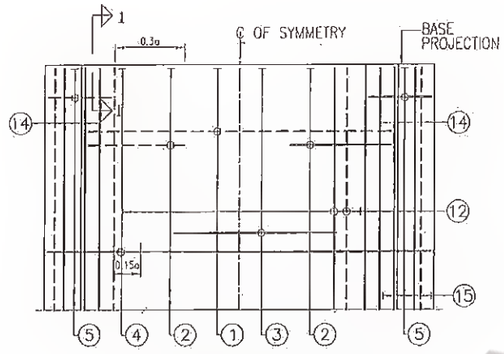

BOTTOM SLAB R/F PLAN
(HAUNCH LINES NOT SHOWN IN PLAN)

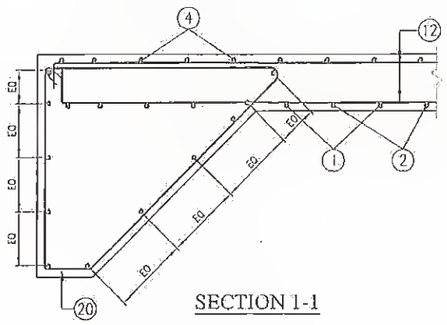

SECTION 1-1

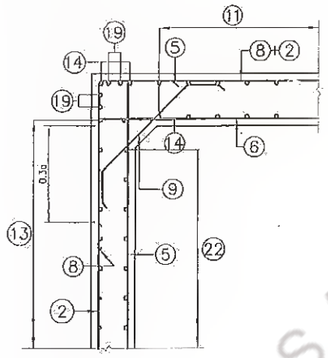

DETAIL-A

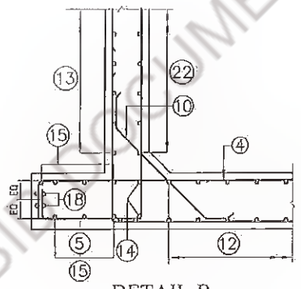

DETAIL-B

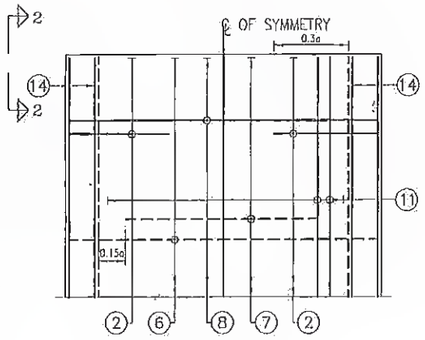

TOP SLAB R/F PLAN

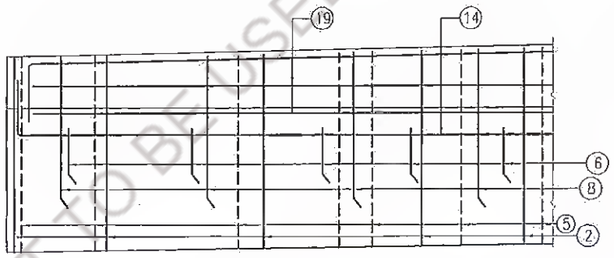

VIEW 2-2
HAUNCH LINES NOT SHOWN

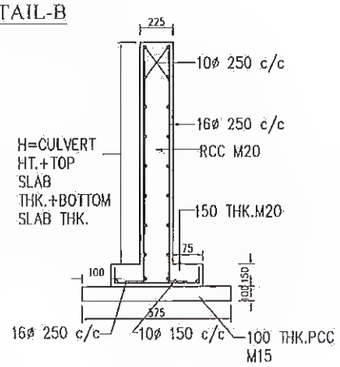

WING WALL DETAILS

SCHEDULE OF REINFORCEMENT

BAR MARK	SHAPE OF BARS (NOT TO SCALE) \ BOX-CELL DESIGNATION	1 x 2.0 x 2.0			
		BAR DIA	SPACING IN MM	M1	M2
1	M1 M2 M1	10	250	930	2500
2	M2 M1 M1	16	250	850	2630
3	M1				
4	M1 M2 M1	16	250	280	3500
5	200 M1 200 M2	16	250	2630	700
6	M1 M2 M1	16	250	260	2500
7	M1				
8	M1 M2 M1	10	250	900	2500
9	M2 M1 M1	10	250	200	890
10	M1 M2 M1	12	250	200	932
11	M1 M2 M1	10	250	225	11900
12	M1 M2 M1	10	250	190	11900
13	M1 M2 M1	10	250	160	11900
14	M1 M2 M1	10	–	160	11900
15	M1 M2 M1	10	250	190	11900
16	M1	12	–	11900	–
17	M1 M2	12	250	1006	1266
18	M1 M2 M1	10	–	160	11900
19	M1 M2 M1	10	–	160	11900
20	M1+0.2 M1 135° M2	10	150	1100	1556
21	M1 M2 M1	10	–	160	3500
22	M1 M2 M1	10	250	160	11900

Revision					
Rev.	Date	Description	Drawn	Checked	Approved

Client:

Project Title: CONSULTANCY SERVICES FOR PREPARATION OF DETAILED PROJECT REPORT (DPR) FOR SH-103 (MANGHWE- GOVINDPUR)

MAHAVIR (TECH) Development Corporation Ltd. Bihar State Road Devp. Corp. Ltd. PIU, Nawada

Consultant: HOLTEC CONSULTING PRIVATE LIMITED
HOLTEC CENTRE, A BLOCK, SUSHANT LOK, GURGAON-122001 HARYANA, INDIA
Phone: 0124-2385035, 2385090, Fax 0124-2385114, 2385116

DGM (HOLTEC) Bihar State Road Devp. Corp. Ltd. PIU, Nawada

Designed	Checked	Approved
YJ	YJ	JIG
Drawn	Scale	Date
SVR	N T S	JANUARY, 2022

Title: TYPICAL DETAIL OF REINFORCEMENT FOR BOX CULVERT 1X2.0X2.0

Drawing No. HOL/BSRDCL/DPR/13510/MISC/CUL-01 | Rev. | Sheet 01

CAD File Ref: | A3

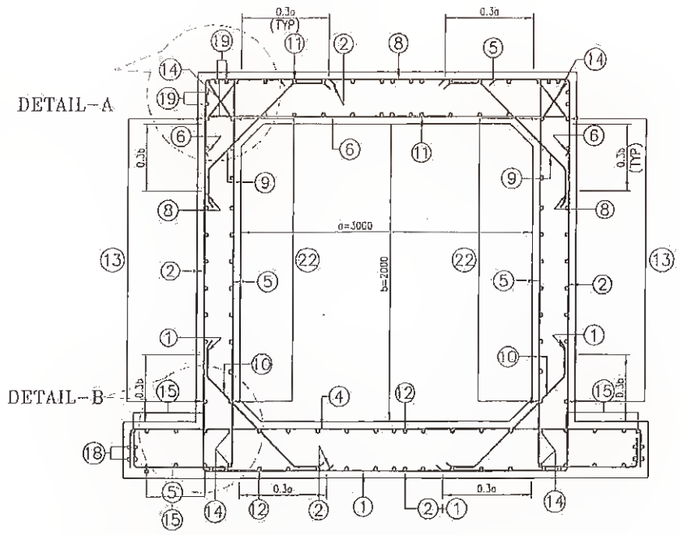

REINFORCEMENT DETAILS OF SINGLE CELL BOX CULVERT

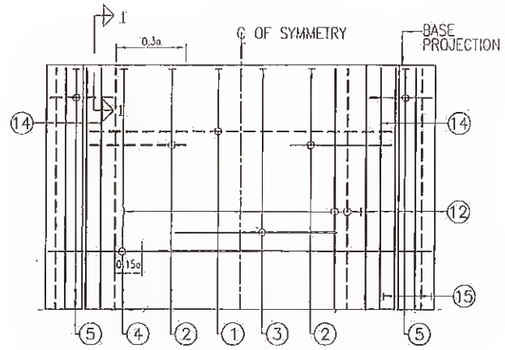

BOTTOM SLAB R/F PLAN
(HAUNCH LINES NOT SHOWN IN PLAN)

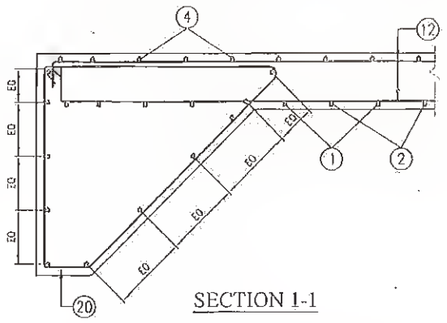

SECTION 1-1

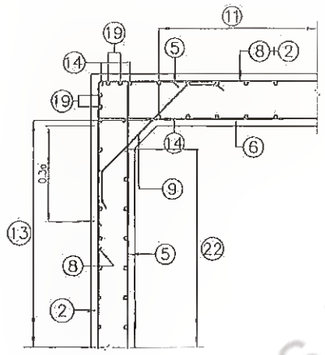

DETAIL-A

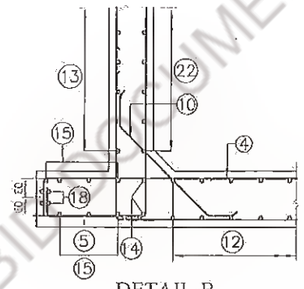

DETAIL-B

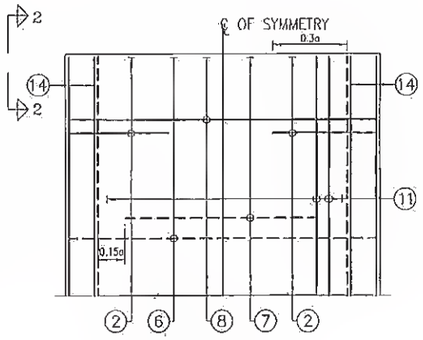

TOP SLAB R/F PLAN

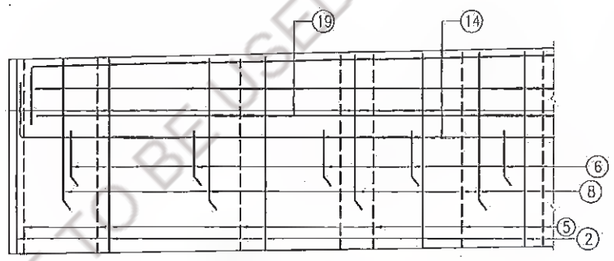

VIEW 2-2
HAUNCH LINES NOT SHOWN

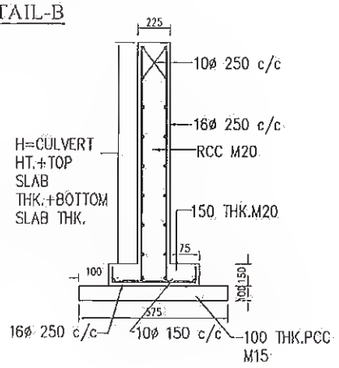

WING WALL DETAILS

SCHEDULE OF REINFORCEMENT

BAR MARK	SHAPE OF BARS (NOT TO SCALE) \ BOX-CELL DESIGNATION	1 x 3.0 x 2.0			
		BAR DIA	SPACING IN MM	M1	M2
1	M1 M2 M1	10	200	1270	3740
2	M2 M1 M1	16	250	850	2630
3	M1				
4	M1 M2 M1	16	200	320	5540
5	200 M1 200 M2	16	250	2630	700
6	M1 M2 M1	16	200	260	3740
7	M1				
8	M1 M2 M1	10	200	1270	3740
9	M2 M1 M1	10	200	200	1156
10	M1 M2 M1	10	200	200	1158
11	M1 M2 M1	10	200	200	11900
12	M1 M2 M1	12	200	210	11900
13	M1 M2 M1	10	200	210	11900
14	M1 M2 M1	10	–	160	11900
15	M1 M2 M1	10	200	210	11900
16	M1	12	–	11900	–
17	M1 M2	12	200	1006	1266
18	M1 M2 M1	10	–	160	11900
19	M1 M2 M1	10	–	160	11900
20	M1 135° M2	10	200	1100	1556
21	M1 M2 M1	10	–	160	5540
22	M1 M2 M1	10	250	160	11900

Revision					
Rev.	Date	Description	Drawn	Checked	Approved

Client: Bihar State Road Development Corporation Ltd.

Project Title: CONSULTANCY SERVICES FOR PREPARATION OF DETAILED PROJECT REPORT (DPR) FOR SH-103 (MANGHWE- GOVINDPUR)

Consultant: HOLTEC CONSULTING PRIVATE LIMITED
HOLTEC CENTRE, A BLOCK, SUSHANT LOK, GURGAON-122001 HARYANA, INDIA
PHONE : 0124-2385095 , 2385096 , Fax 0124-2385114 , 2385116

Designed	Checked	Approved
YJ	YJ	JIG
Drawn: SVR	Scale: N T S	Date: JANUARY, 2022

Title: TYPICAL DETAIL OF REINFORCEMENT FOR BOX CULVERT 1X3.0X2.0

Drawing No. HOL/BSRDCL/DPR/13510/MISC/CUL-03 | Rev. | Sheet 01 | A3

CO File Ref:

MISCELLANEOUS

MANAGER (TECH)
Bihar State Road Devp. Corp. Ltd.
PIU, Nawada

DGM (Tech)
Bihar State Road Devp. Corp. Ltd.
PIU, Nawada

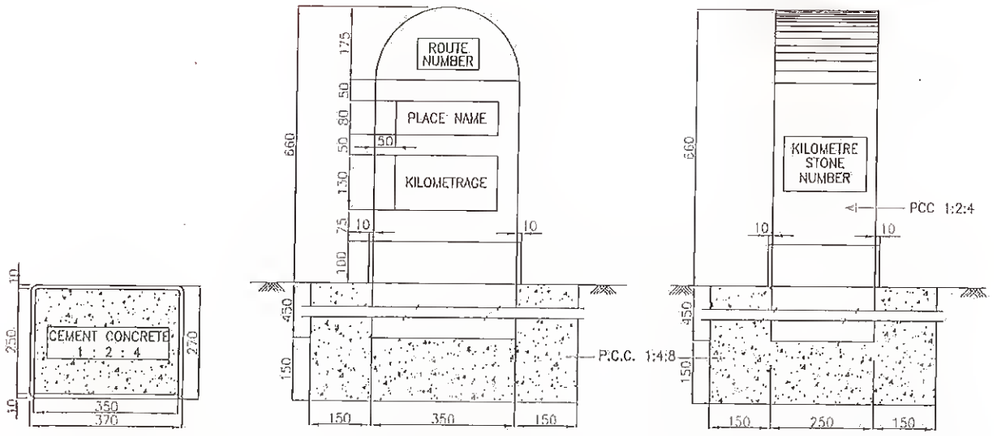

SECTIONAL PLAN — FRONT ELEVATION — SIDE ELEVATION

TYPICAL DETAILS OF ORDINARY KILOMETRE STONE

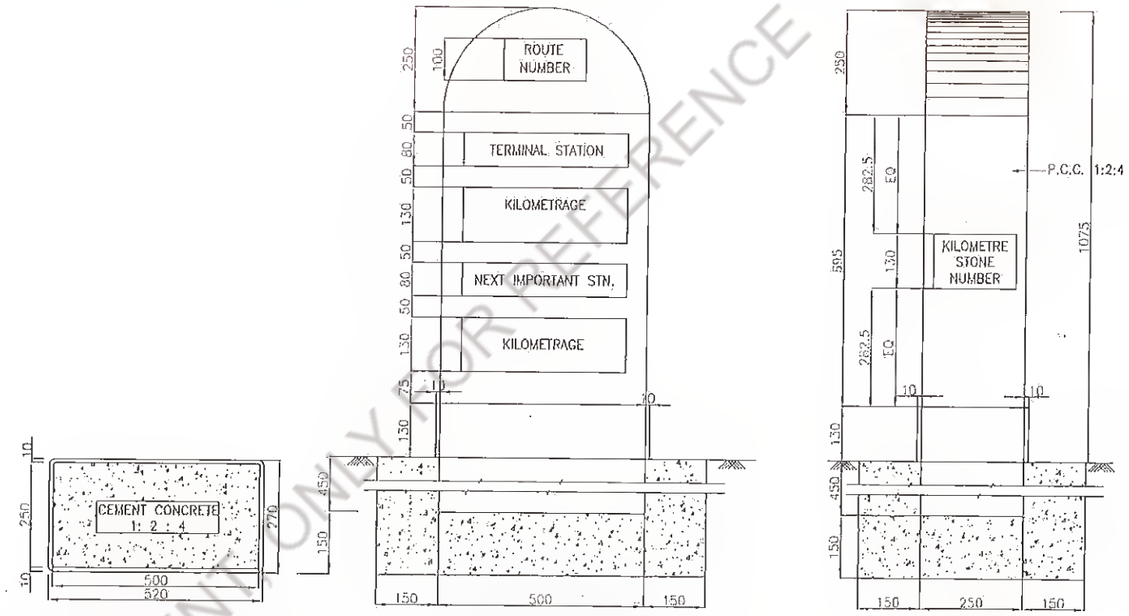

SECTIONAL PLAN — FRONT ELEVATION — SIDE ELEVATION

TYPICAL DETAILS OF FIFTH (5th) KILOMETRE STONE

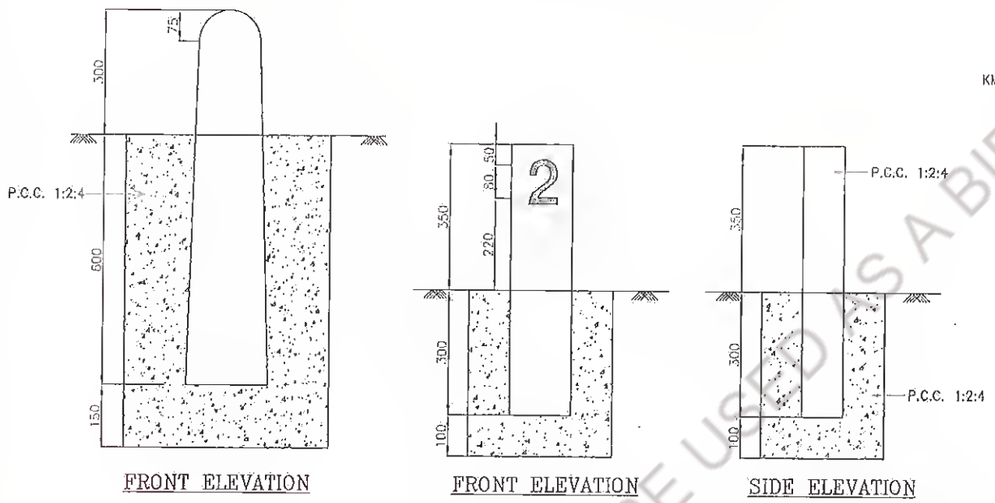

FRONT ELEVATION — FRONT ELEVATION — SIDE ELEVATION

TYPICAL DETAILS OF 200 METRE STONE

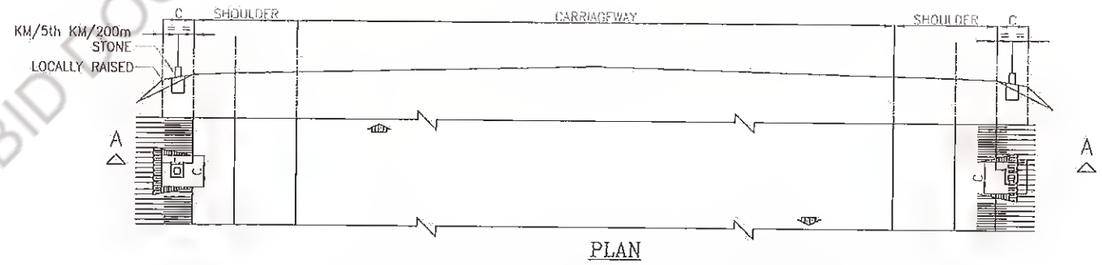

PLAN

LOCATION OF KILOMETRE & 200 METRE STONE

NOTES

* ALL DIMENSIONS ARE IN MILLIMETRES UNLESS OTHERWISE SPECIFIED
* DIMENSIONS ARE NOT TO BE SCALED AND ONLY WRITTEN DIMENSIONS TO BE FOLLOWED
* DETAILS OF ORDINARY KM STONE AND 5th KM STONE ARE GENTERALLY BASED ON IRC: 8-1980
* DETAILS OF 200m STONE ARE GENERALLY BASED ON IRC: 26-1967
* VALUE OF 'C' IS 1500mm FOR KM/5th KM STONE & 1000mm FOR 200m STONE

Revisions					
Rev.	Date	Description	Drawn	Checked	Approved

Client : Bihar State Road Development Corporation Ltd.

DGM (Tech) Bihar State Road Devp. Corp. Ltd.

MANAGER Bihar State Road Devp. Corp. PIU, Nawada

Project : CONSULTANCY SERVICES FOR PREPARATION OF DETAILED PROJECT REPORT (DPR) FOR SH-103 (MANGHWE- GOVINDPUR)

Consultant: HOLTEC CONSULTING PRIVATE LIMITED
HOLTEC CENTRE, A BLOCK, SUSHANT LOK, GURGAON-122001 HARYANA, INDIA
PHONE : 0124-2385095 , 2385096 , FAX 0124-2385114 , 2385116

Designed	Checked	Approved
YJ	JIG	JIG
Drawn: SVR	Scale: NTS	Date: DEC. 2021

Title : TYPICAL DETAIL OF 200M, IKM STONE AND 5TH KM STONE

Drawing No. : HOL/BSRDCL/DFR/13510/MISC/KM STONE — Rev. 0 — Sheet

CAD File Ref. : HOL/BSRDCL/DFR/13510/MISC/KM STONE — A3

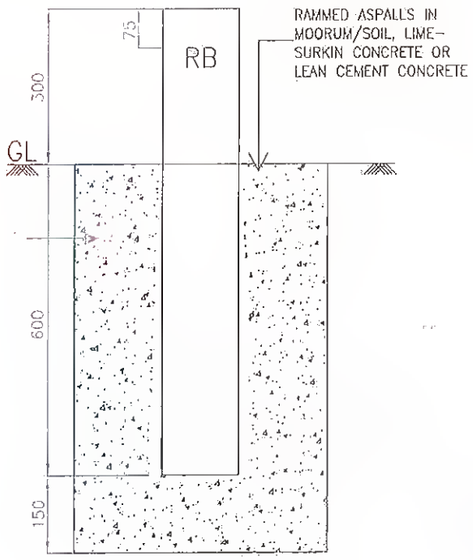

FRONT ELEVATION

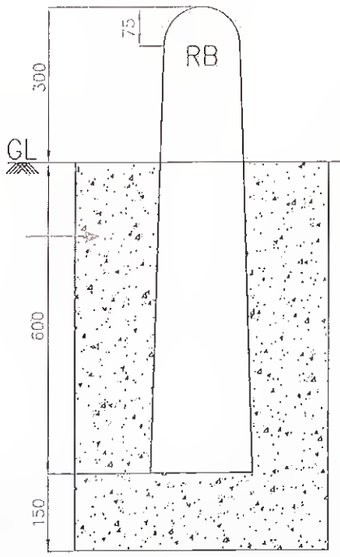

FRONT ELEVATION

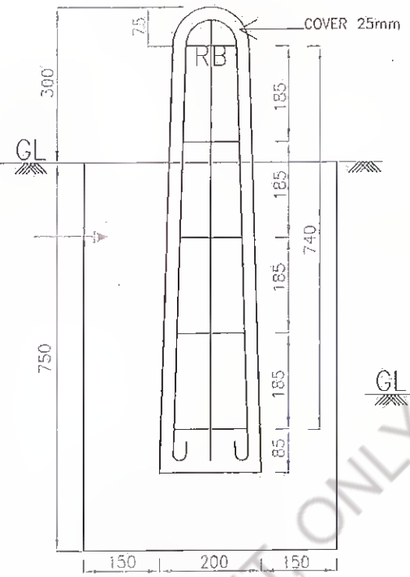

SECTION AT A-A

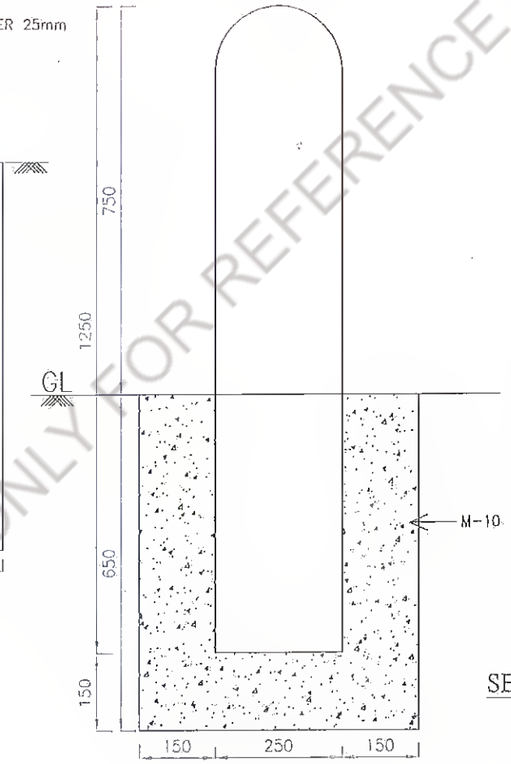

FRONT ELEVATION

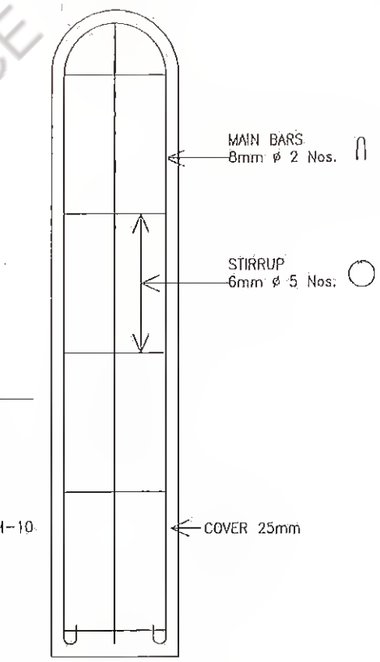

SECTION AT B-B

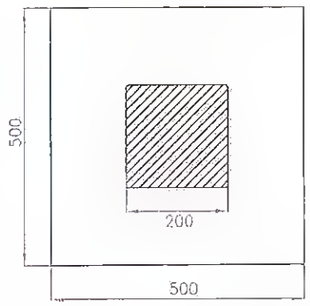

PLAN

TYPE DESIGN WITH STONE AS MATERIAL

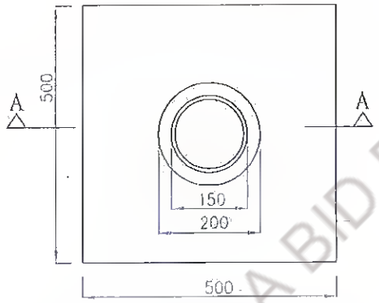

PLAN

TYPE DESIGN WITH R.C.C. AS MATERIAL

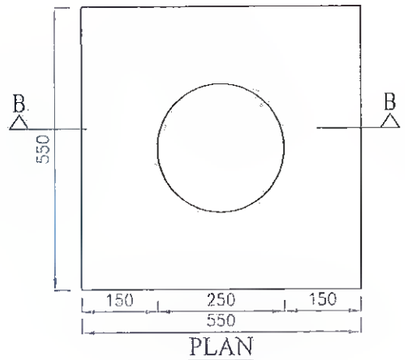

PLAN

BAR BENDING SCHEDULE

S.NO.	TYPE OF M.S BAR	NO. OF BARS	SHAPE OF BARS	DIA IN mm	LENTH OF BAR INCLUDING HOOKS
1	MAIN BARS	2	∩	6mm	1.84m
2	TOPMOST STIRRUP	1	○	6mm	370mm
3	STIRRUP (FIRST FSOM TOP)	1	○	6mm	405mm
4	STIRRUP (SECOND FSOM TOP)	1	○	6mm	440mm
5	STIRRUP (THIRD FSOM TOP)	1	○	6mm	475mm
6	BOTTOM STIRRUP	1	○	6mm	810mm

Revisions

Rev.	Date	Description	Drawn	Checked	Approved

Client : Bihar State Road Development Corporation Ltd. (Corp. Ltd.) PIU Nawada

MANAGER (TECH) State Road Devp. Corp. Ltd. Bihar

Project : CONSULTANCY SERVICES FOR PREPARATION OF DETAILED PROJECT REPORT (DPR) FOR SH-103 (MANGHWE- GOVINDPUR)

Consultant: HOLTEC CONSULTING PRIVATE LIMITED
HOLTEC CENTRE, A BLOCK, SUSHANT LOK, GURGAON-122001 HARYANA, INDIA
PHONE : 0124-2385095 , 2385096 , FAX 0124-2385114 , 2385116.

Designed	Checked	Approved
YJ	JIG	JIG
Drawn SVR	Scale NTS	Date DEC. 2021

Title : TYPICAL DETAILS OF BOUNDARY STONES & GUARD POST

Drawing No. : HOL/BSRDCL/DFR/13510/MISC/B STONE — Rev. 0 — Sheet

CAD File Ref. : HOL/BSRDCL/DFR/13510/MISC/B STONE — A3

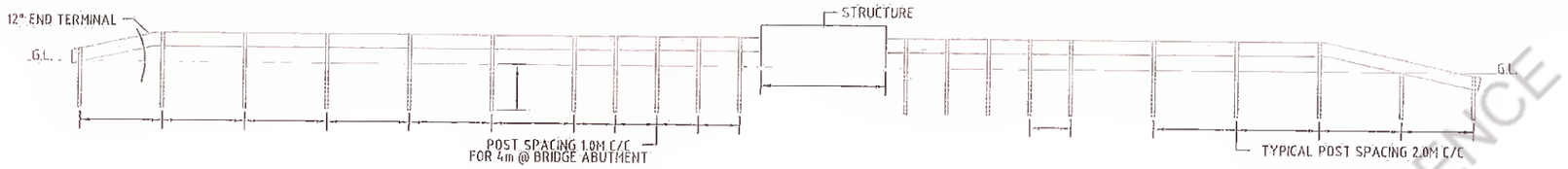

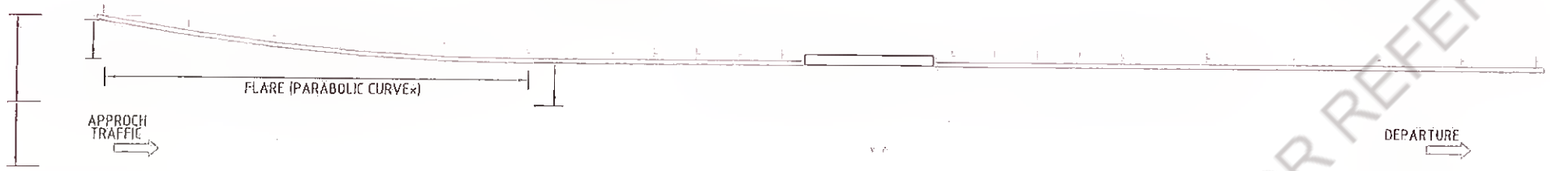

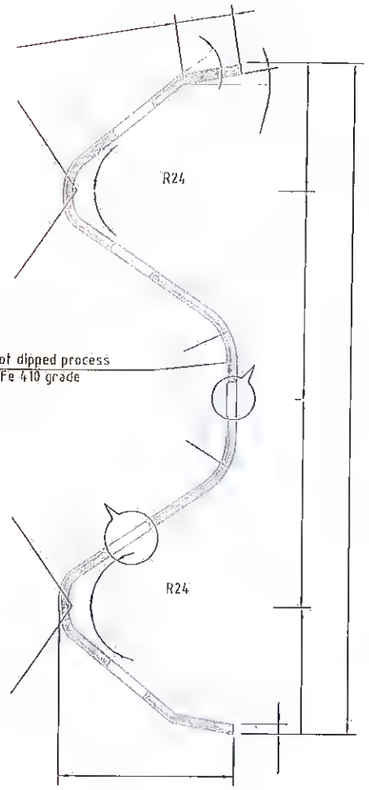

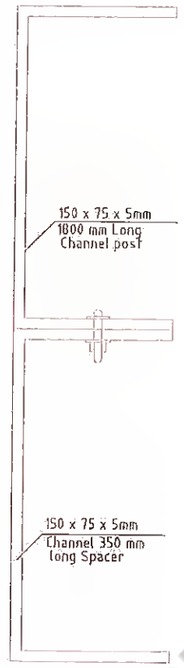

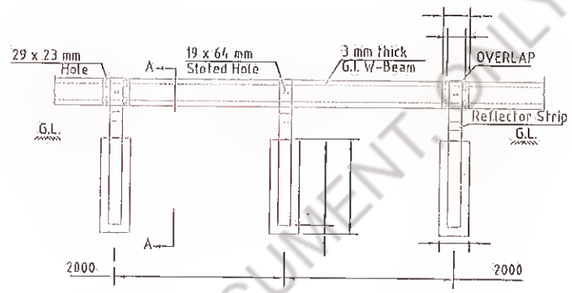

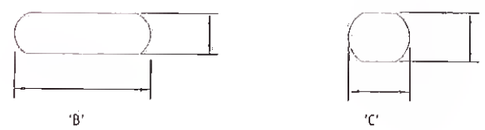

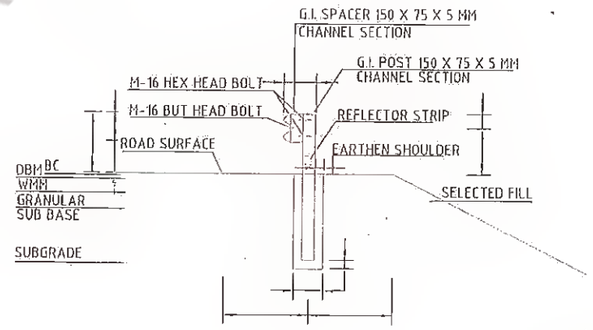

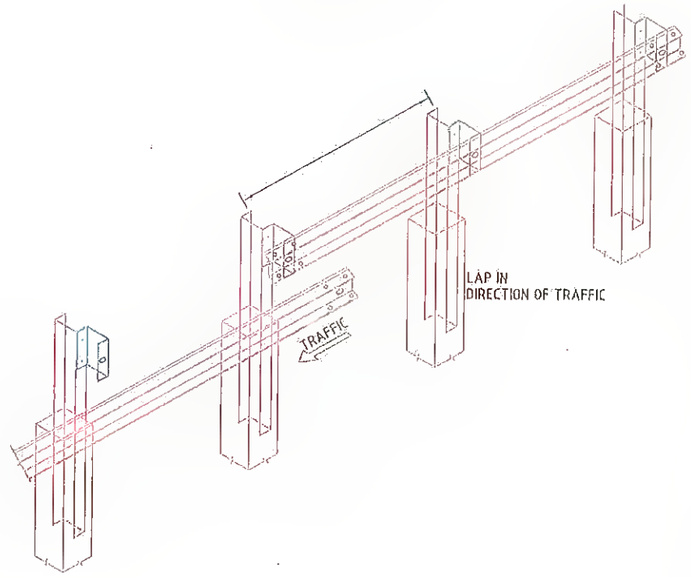

1. ALL THE DIMENSIONS ARE IN MILLIMETER UNLESS SPECIFIED.
2. CORRUGATED METAL BEAM SHALL BE 3MM THICK.
3. W-BEAM SHALL BE COLD ROLL FORMED SECTION.
4. ALL RAW MATERIAL SHALL CONFORM TO IS 5986 (Gr.Fe 410:ST-42) HOT DIP GALVANISED TO 550 gm/Sqm.
5. SPACERS SHALL BE AS PER IS :2062-1992
6. IN FOOTING M15 GRADE SHALL BE PROVIDED OF SIZE 350mmX350mmX1100mm
7. EVERY CHANNEL POST SHALL BE 2M C/C APART EXCEPT STRUCTURE LOCATIONS.
8. THE ENDS OF FASTNERS ARE TO BE FLARED BY PNEUMATIC OPERATION TO ENSURE THAT THE BOLTS ARE NOT REMOVABLE
9. *PARABOLIC CURVE

EQUATION : $y = \frac{w x^2}{l^2}$

where
w = tangent offset at maximum flare (1200mm).
l = total length of flare (11400mm).
y = tangent offset at any point in guardrail flare.
x = distance from point of tangent to any point of offset.

Revision					
Rev.	Date:	Description	Drawn	Checked	Approved

Client: Bihar State Road Development Corporation Ltd.
DGM (Tech) Bihar State Road Devp. Corp. Ltd. PIU, Nawada

Project Title : CONSULTANCY SERVICES FOR PREPARATION OF DETAILED PROJECT REPORT (DPR) FOR SH-103 (MANGHWE- GOVINDPUR)

Consultant: HOLTEC CONSULTING PRIVATE LIMITED

Designed	Checked	Approved
YJ	JIG	JIG
Drawn	Scale	Date
SVR	NTS	DEC. - 2021

Title : TYPICAL DETAILS OF METAL CRASH BARRIER

Drawing No. HOL/BSRDCL/DPR/13510/MISC/MCB | Rev. | Sheet 08

CAD File Ref : | A3

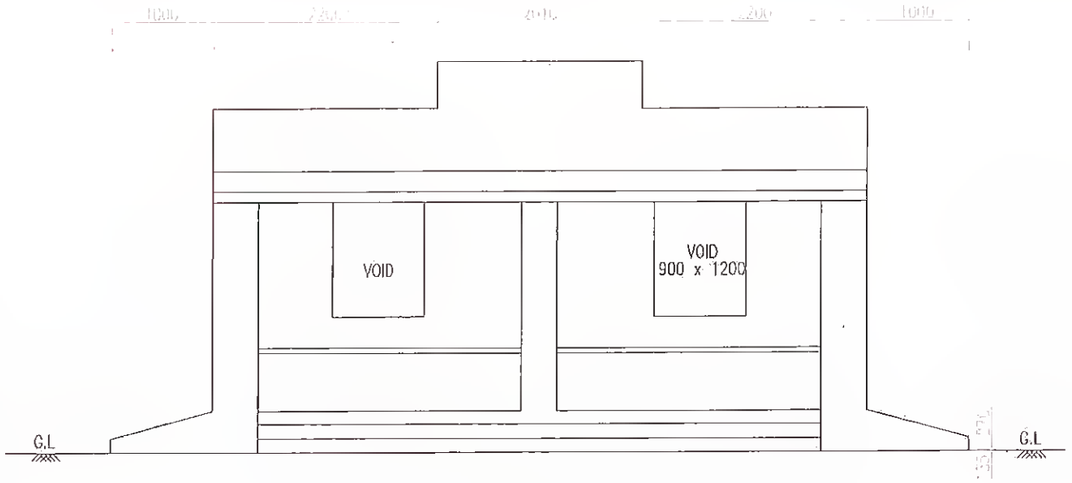

ELEVATION

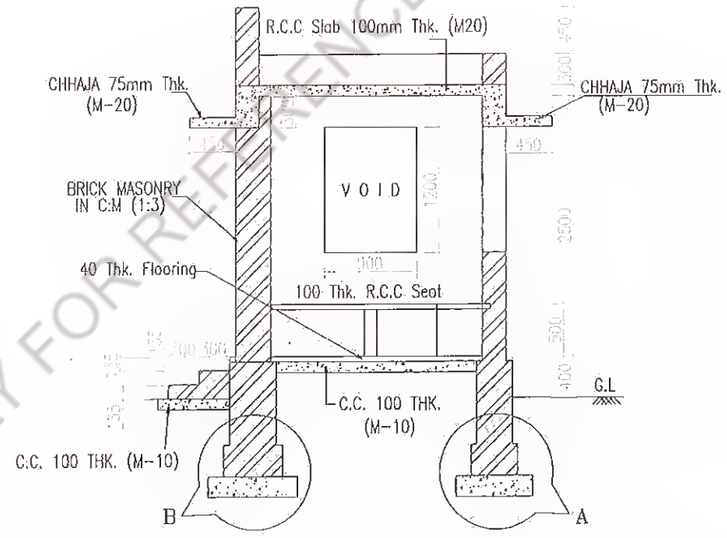

SECTION AT A-A

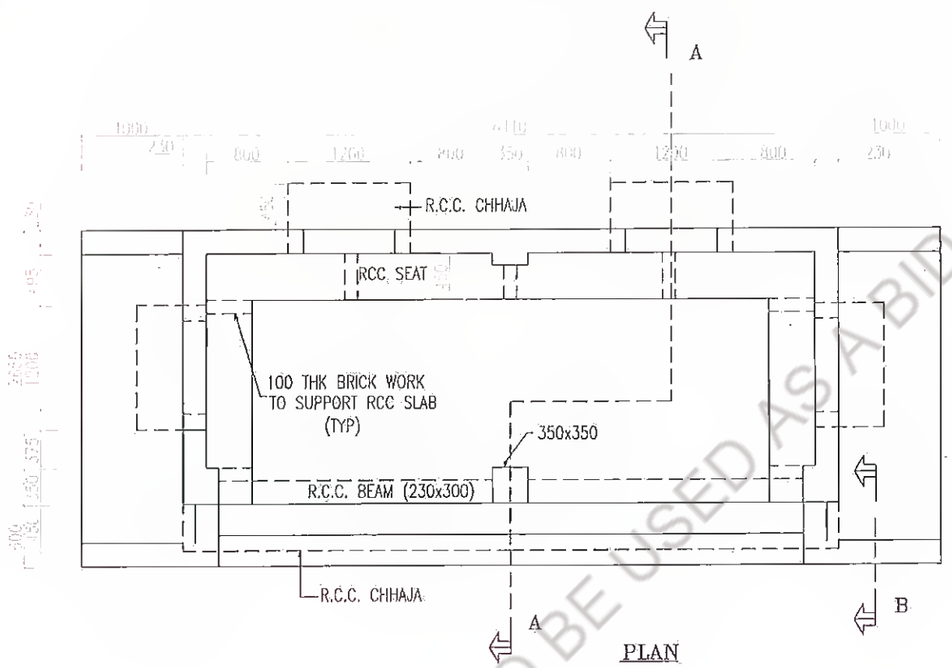

PLAN

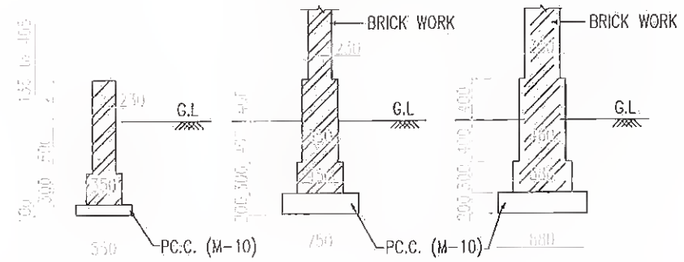

SECTION AT B-B FOOTING DETAIL-A FOOTING DETAIL-B

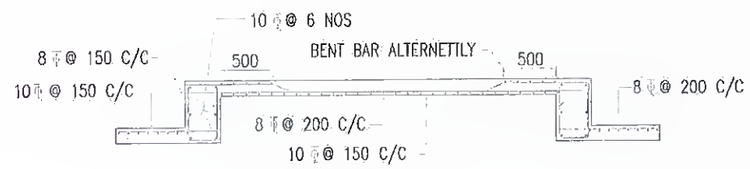

REINFORCEMENT DETAIL OF R.C.C Slab

NOTES:

1. ALL DIMENSIONS ARE IN MILIMETRES AND LEVELS ARE IN METRES UNLESS OTHERWISE SPECIFIED.
2. ONLY WRITTEN DIMENSIONS TO BE FOLLOWED.
3. BRICK WALLS ARE PLASTERED IN CEMENT MORTAR IN PROPORTION 1:3 (15mm THICK).
4. BUS SHELTERS ARE PAINTED WITH TWO COATS OF SNOWCEM.

Revision					
Rev.	Date:	Description	Drawn	Checked	Approved

Client: Bihar State Road Development Corporation Ltd.

Project Title : CONSULTANCY SERVICES FOR PREPARATION OF DETAILED PROJECT REPORT (DPR) FOR SH-103 (MANGHWE - GOVINDPUR)

Consultant: HOLTEC CONSULTING PRIVATE LIMITED

Designed	Checked	Approved
YJ	JIG	JIG
Drawn	Scale	Date
SVH	NTS	DEC. - 2021

Title : TYPICAL BUS SHELTER

Drawing No. HCL/BSRDCL/DPR/13510/MISC/TBS | Rev. | Sheet 02

CAD File Ref : | A3

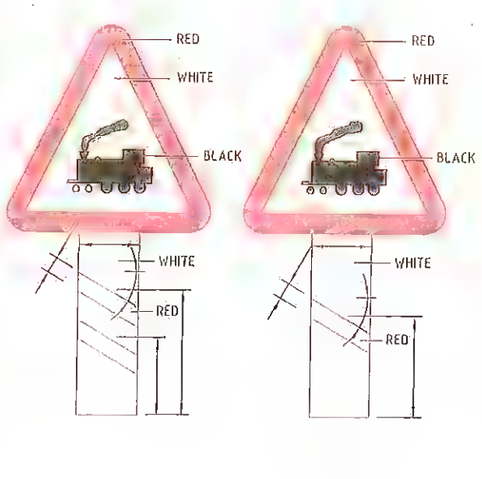

W6-UR

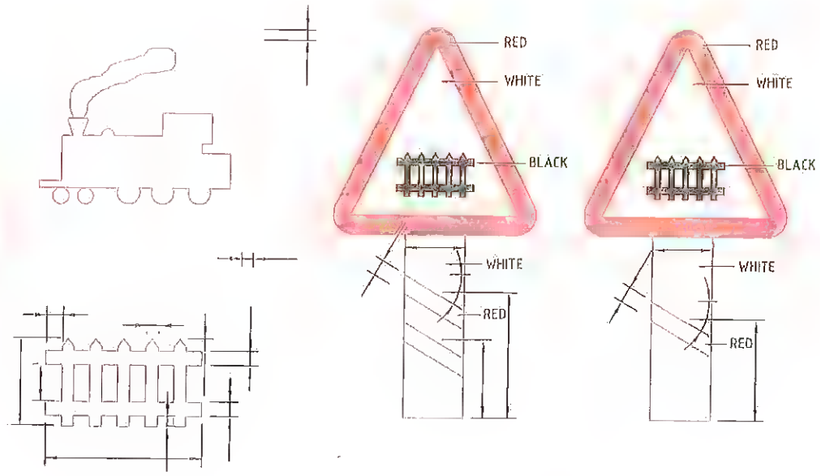

W6-GR

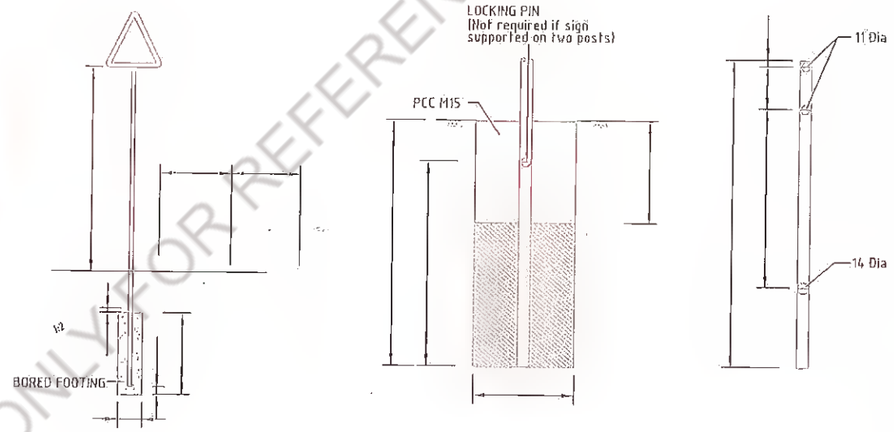

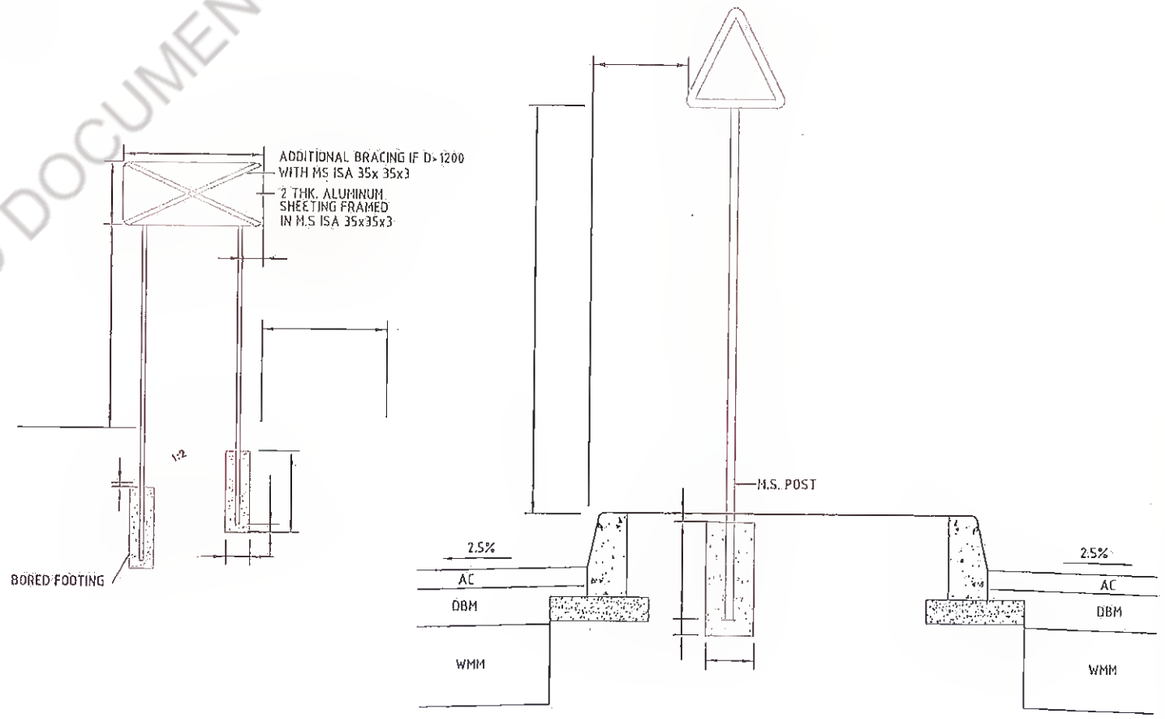

1. ALL THE DIMENSIONS ARE IN MILLIMETER UNLESS SPECIFIED
2. RETROREFLECTORISED SHEETING SHALL BE CONFORMING TO ASTM D-4956-09/Type-IV
3. THE RETROREFLECTORIZED SHEETING AND MS ANGLE IRON POST SHALL BE IN ONE PIECE AND WITHOUT ANY JOINT.
4. THE SHEETING SHALL BE SECURELY BOLTED TO THE POST, THE REMAINING PORTION OF THE BOLT AFTER TIGHTENING THE NUT SHALL BE HAMMERED TO FORM RIVETING.
5. IN CASE OF ROAD SIGNS, IRON POST SHALL BE PAINTED WITH ONE COAT OF EPOXY PRIMER AND TWO COATS OF EPOXY FINISH PAINT HAVING BLACK AND WHITE BANDS OF 250MM WIDTH.
6. OBJECT MARKER SHALL BE SETBACK BY 500MM FROM THE FACE OF THE KERB. IT SHALL BE DRILLED INTO CONCRETE KERBS UPTO 600 MM DEPTH.
7. INDICATORS SHALL BE DIE CAST IN ALUMINUM, RESISTANT TO CORROSIVE EFFECT OF SILT AND GRIT, FITTED WITH LENS REFLECTORS.
8. ALL FOUNDATIONS SHALL BE IN M15 GRADE CEMENT CONCRETE.
9. HAZARD MARKERS SHALL BE PRESSED INTO GROUND.
10. BACK SIDE OF SIGN BOARD SHALL BE PAINTED WITH TWO COATS OF GRAY EPOXY PAINT.
11. ROAD SIGN SHALL BE ERECTED AS PER SPECIFICATION OF IRC: 35-1997.

Revision					
Rev.	Date	Description	Drawn	Checked	Approved

Client: Bihar State Road Development Corporation Ltd. (Tech) Devpt of Nawada

Project Title : CONSULTANCY SERVICES FOR PREPARATION OF DETAILED PROJECT REPORT (DPR) FOR SH-103 (MANGHWE- GOVINDPUR)

Consultant: HOLTEC CONSULTING PRIVATE LIMITED

Designed	Checked	Approved
VJ	JIG	JIG
Drawn	Scale	Date
SVH	NTS	DEC. - 2021

Title : TYPICAL DETAILS OF TRAFFIC SIGNS

Drawing No. HOL/BSRDCL/DPR/13510/MISC/TS | Rev. | Sheet 07

EAD File Ref : | A3

CAUTIONARY/WARNING SIGNS

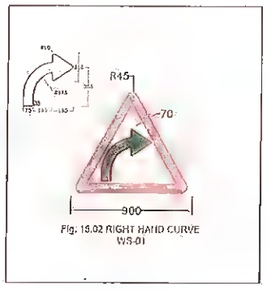

Fig. 15.02 RIGHT HAND CURVE
WS-01

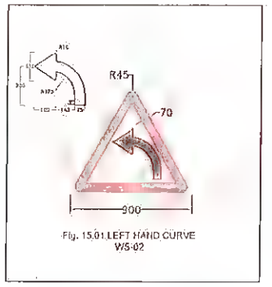

Fig. 15.01 LEFT HAND CURVE
WS-02

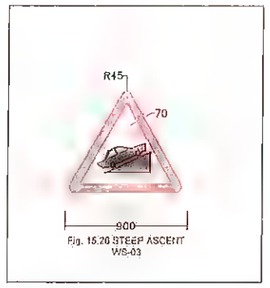

Fig. 15.20 STEEP ASCENT
WS-03

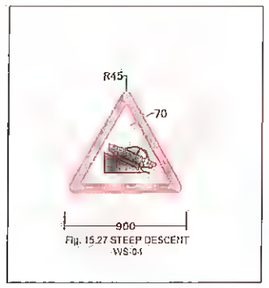

Fig. 15.27 STEEP DESCENT
WS-04

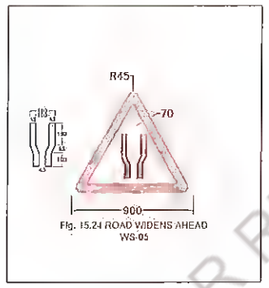

Fig. 15.24 ROAD WIDENS AHEAD
WS-05

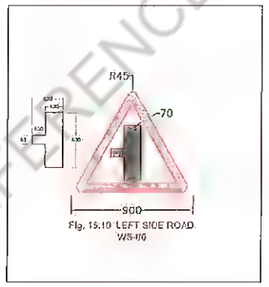

Fig. 15.10 LEFT SIDE ROAD
WS-06

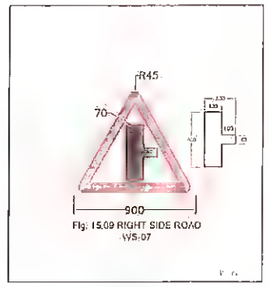

Fig. 15.09 RIGHT SIDE ROAD
WS-07

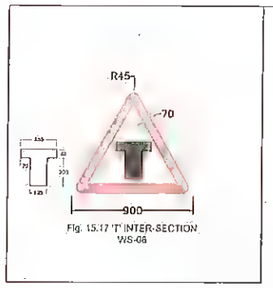

Fig. 15.17 'T' INTER-SECTION
WS-08

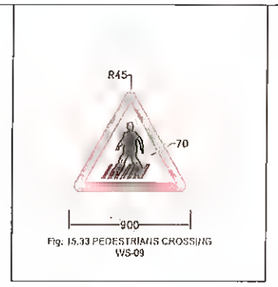

Fig. 15.33 PEDESTRIANS CROSSING
WS-09

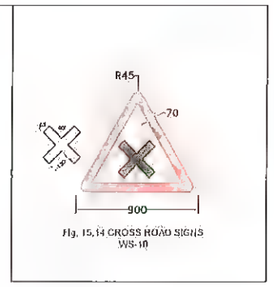

Fig. 15.14 CROSS ROAD SIGNS
WS-10

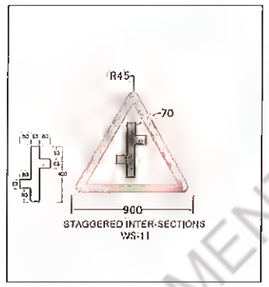

STAGGERED INTER-SECTIONS
WS-11

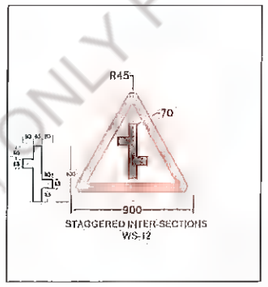

STAGGERED INTER-SECTIONS
WS-12

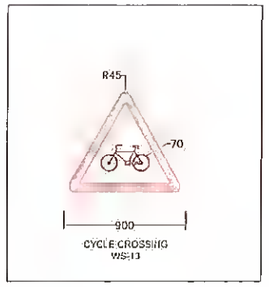

CYCLE CROSSING
WS-13

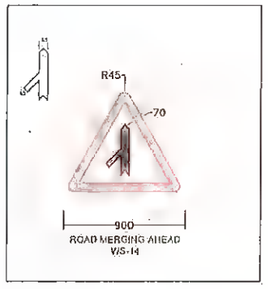

ROAD MERGING AHEAD
WS-14

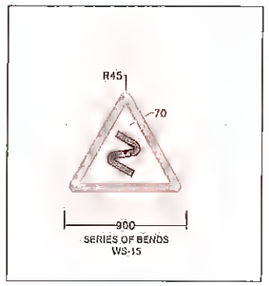

SERIES OF BENDS
WS-15

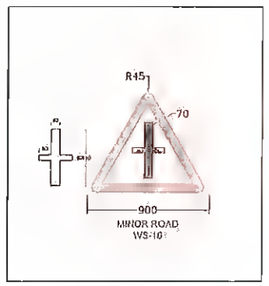

MINOR ROAD
WS-16

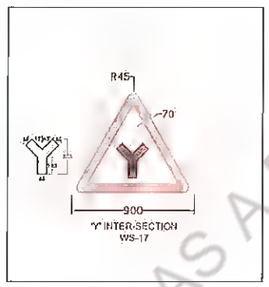

'Y' INTER-SECTION
WS-17

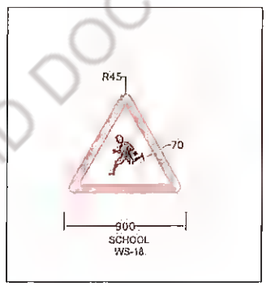

SCHOOL
WS-18

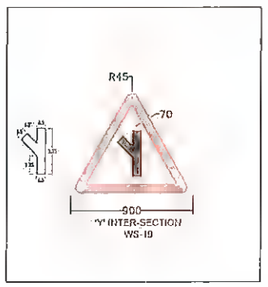

'Y' INTER-SECTION
WS-19

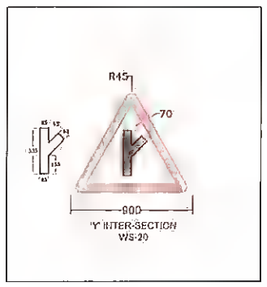

'Y' INTER-SECTION
WS-20

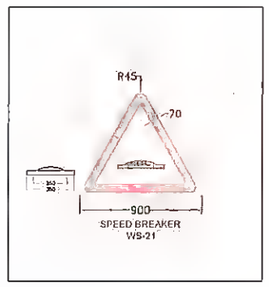

SPEED BREAKER
WS-21

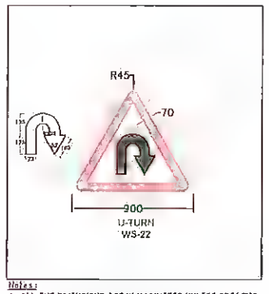

U-TURN
WS-22

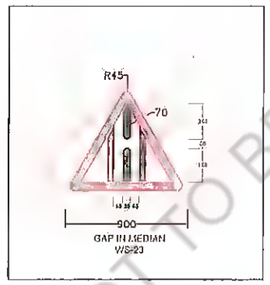

GAP IN MEDIAN
WS-23

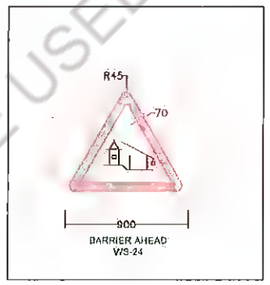

BARRIER AHEAD
WS-24

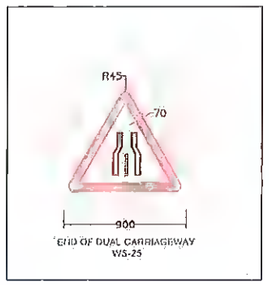

END OF DUAL CARRIAGEWAY
WS-25

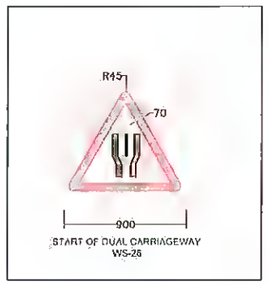

START OF DUAL CARRIAGEWAY
WS-26

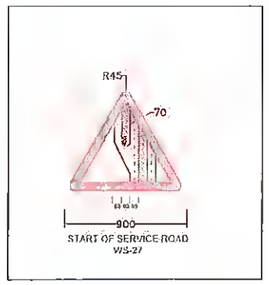

START OF SERVICE ROAD
WS-27

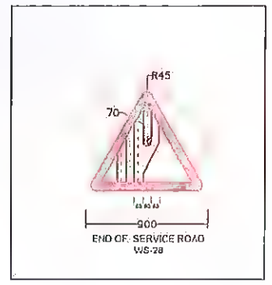

END OF SERVICE ROAD
WS-28

Notes:
1. ALL THE DIMENSIONS ARE IN MILLIMETER UNLESS SPECIFIED
2. RETROREFLECTORISED SHEETING SHALL BE CONFORMING TO ASTM D-4956-97/ TYPE-IV
3. REFER TYPE DESIGNS FOR INTERSECTIONS NATIONAL HIGHWAYS (MOST) 1995.
4. ROAD SIGN SHALL BE ERECTED AS PER SPECIFICATION OF IRC-67

Revision					
Rev.	Date	Description	Drawn	Checked	Approved

Client:

Bihar State Road Development Corporation Ltd.
PIU, Nawada

Project Title :

CONSULTANCY SERVICES FOR PREPARATION OF DETAILED PROJECT REPORT (DPR) FOR SH-103 (MANGHWE- GOVINDPUR)

Consultant: HOLTEC CONSULTING PRIVATE LIMITED

Designed	Checked	Approved
YJ	JIG	JIG
Drawn	Scale	Date
SVR	NTS	DEC. - 2021

Title : TYPICAL DETAILS OF TRAFFIC SIGNS (CAUTIONARY/WARNING SIGNS)

Drawing No. HOL/BSRDCL/DPR/13510/MISC/CWS | Rev. | Sheet 01

GD File Ref : | A3

MANDATORY/REGULATORY SIGNS

STOP SIGNS
FOR CENTRAL ISLAND STOP SINGH
SIZE SHALL BE OF 600mm
S-01

COMPULSORY DIRECTION CONTROL
AND OTHER SIGNS

COMPULSORY
KEEP LEFT
S-02

GIVE WAY SIGNS
MS-02

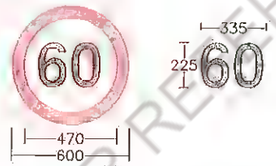

SPEED LIMIT
M-2

SPEED LIMIT END

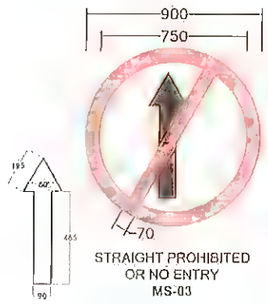

STRAIGHT PROHIBITED
OR NO ENTRY
MS-03

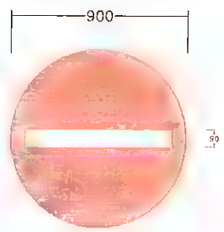

NO ENTRY
MS-04

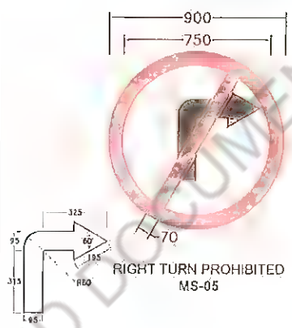

RIGHT TURN PROHIBITED
MS-05

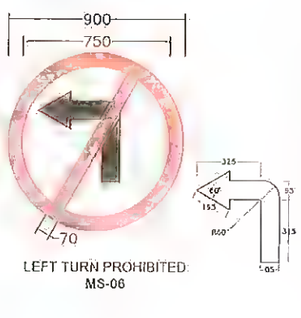

LEFT TURN PROHIBITED
MS-06

U-TURN PROHIBITED
MS-07

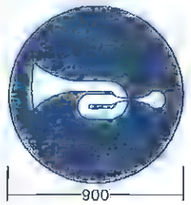

COMPULSORY
SOUND HORN
MS-08

HORN PROHIBITED
MS-09

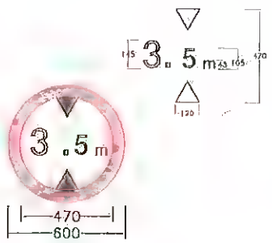

HEIGHT LIMIT
MS-10

LENGTH LIMIT
MS-11

SPEED LIMIT END
MS-12

1. ALL THE DIMENSIONS ARE IN MILLIMETER UNLESS SPECIFIED
2. RETROREFLECTORISED SHEETING SHALL BE CONFORMING TO ASTM D-4956-09/ TYPE-IV
3. ROAD SIGN SHALL BE ERECTED AS PER SPECIFICATION OF IRC: 67

Revision					
Rev.	Date:	Description	Drawn	Checked	Approved

Client: Bihar State Road Development Corporation Ltd.

Project Title : CONSULTANCY SERVICES FOR PREPARATION OF DETAILED PROJECT REPORT (DPR) FOR SH-103 (MANGHWE- GOVINDPUR)

Consultant: HOLTEC CONSULTING PRIVATE LIMITED

Designed	Checked	Approved
YJ	JIG	JIG
Drawn SVR	Scale NTS	Date DEC. - 2021

Title : TYPICAL DETAILS OF TRAFFIC SIGNS (MANDATORY/REGULATORY SIGNS)

Drawing No. HOL/BSRDCL/DPR/13510/MISC/MRS. Rev. Sheet 02

DWG File Ref : A3

INFORMATORY SIGN BOARD:-

FACILITY INFORMATION SIGNS

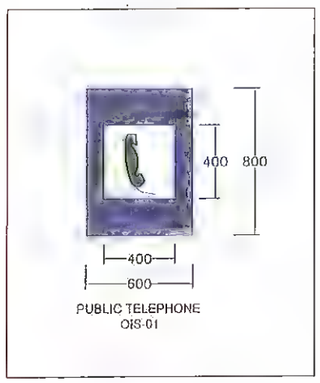

PUBLIC TELEPHONE
OIS-01

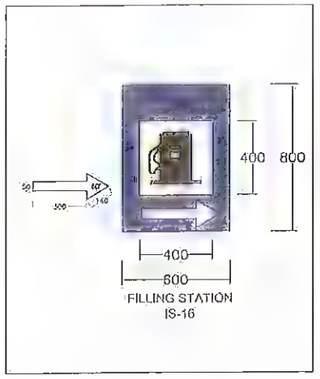

FILLING STATION
IS-16

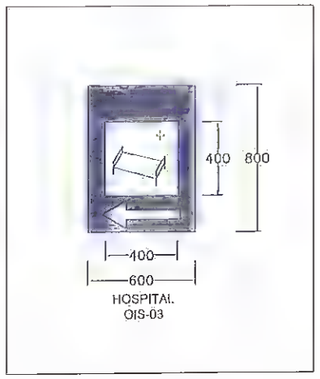

HOSPITAL
OIS-03

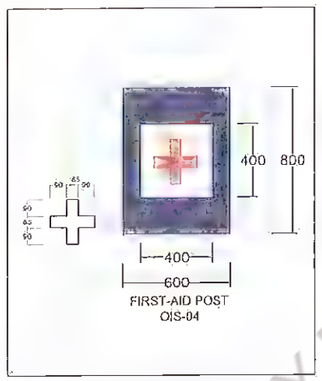

FIRST-AID POST
OIS-04

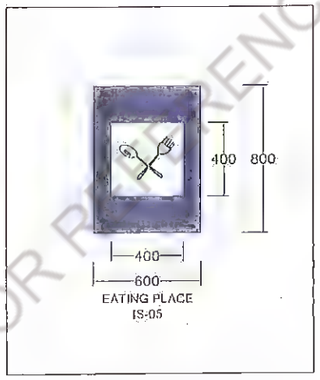

EATING PLACE
IS-05

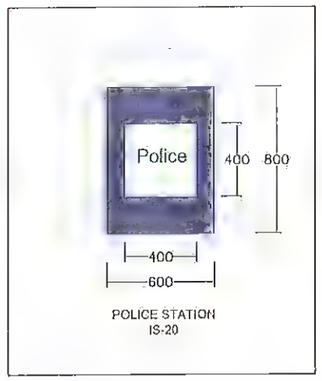

POLICE STATION
IS-20

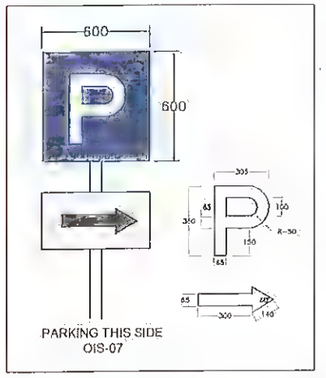

PARKING THIS SIDE
OIS-07

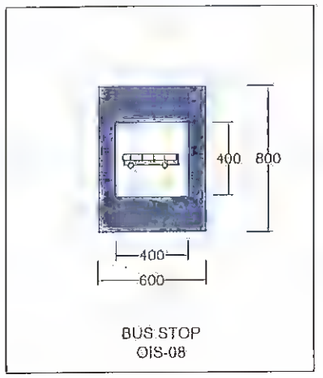

BUS STOP
OIS-08

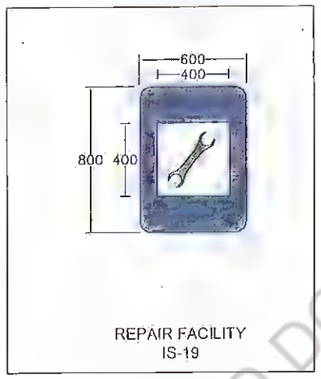

REPAIR FACILITY
IS-19

(B) DIRECTION AND PLACE IDENTIFICATION SIGNS

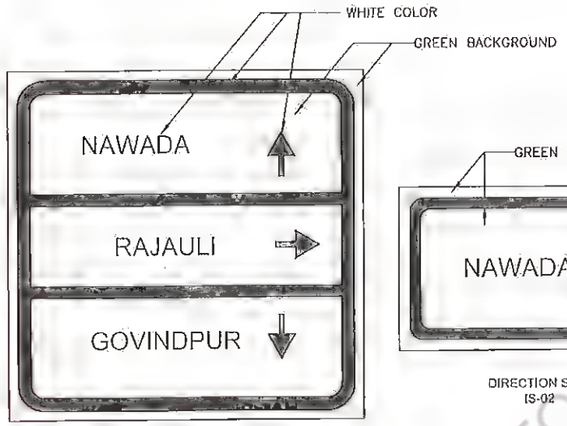

ADVANCE DIRECTION / DESTINA SIGN
IS-01

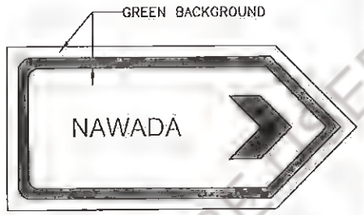

DIRECTION SIGN
IS-02

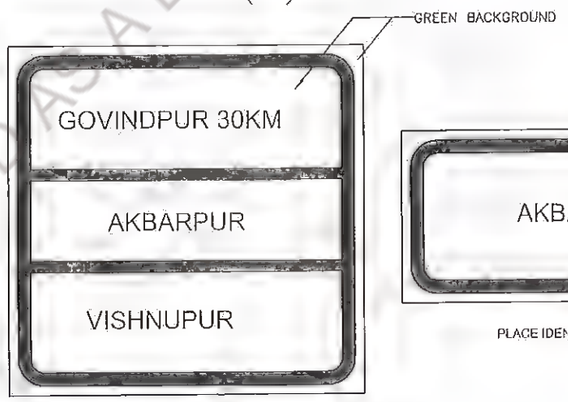

REASSURANCE SIGN
IS-03

PLACE IDENTIFICATION SIGN
IS-04

TRUCK LAY BYE
IS-05

TOLL BOOTH AHEAD
IS-06

1. ALL THE DIMENSIONS ARE IN MILLIMETER UNLESS SPECIFIED
2. RETROREFLECTORISED SHEETING SHALL BE CONFORMING TO ASTM D-4956-09/ TYPE-IV
3. ROAD SIGN SHALL BE ERECTED AS PER SPECIFICATION OF IRC: 67

Revision					
Rev.	Date	Description	Drawn	Checked	Approved

Client: Bihar State Road Development Corporation Ltd.

Project Title : CONSULTANCY SERVICES FOR PREPARATION OF DETAILED PROJECT REPORT (DPR) FOR SH-103 (MANGHWE- GOVINDPUR)

Consultant: HOLTEC CONSULTING PRIVATE LIMITED

Designed	Checked	Approved
YJ	JIG	JIG
Drawn	Scale	Date
SVR	NTS	DEC. - 2021

Title : TYPICAL DETAILS OF TRAFFIC SIGNS (FACILITY INFORMATION SIGNS)

Drawing No. HOL/BSRDCL/DPR/13510/MISC/FIS | Rev. | Sheet 03

CAD File Ref : | A3

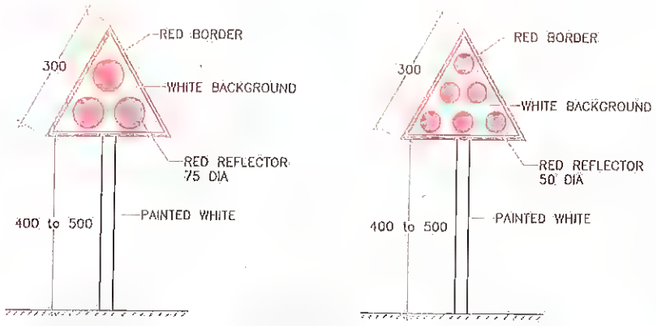

CLUSTER OF RED REFLECTORS TA-1

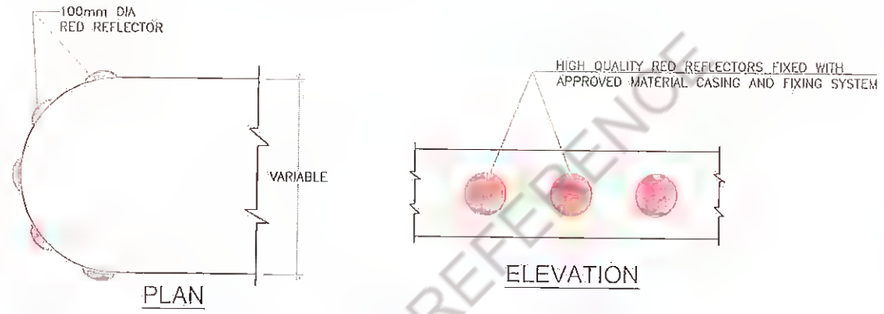

MEDIAN TIP REFLECTORS TA-2

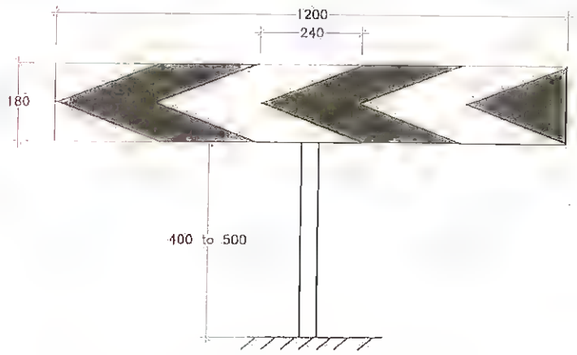

ONE-WAY HAZARD MARKER TA-3

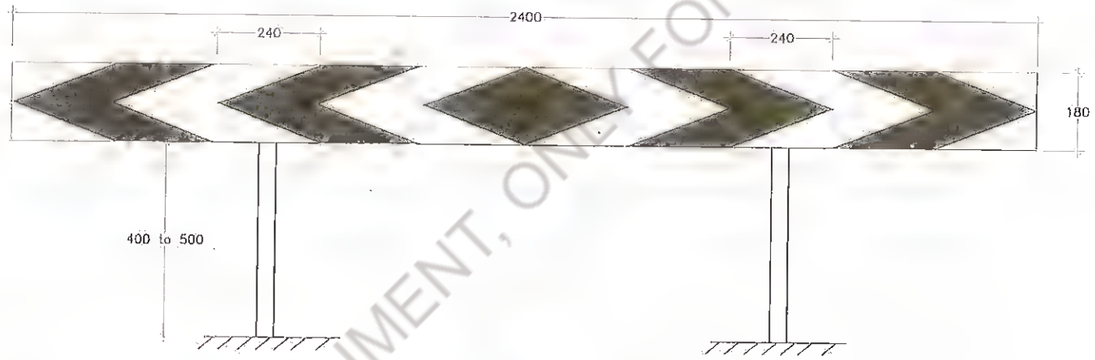

TWO-WAY HAZARD MARKER TA-3A

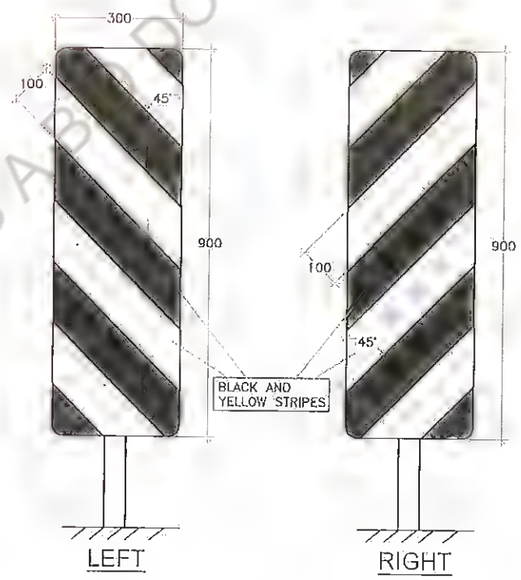

OBJECT HAZARD MARKERS MS-14

NOTE:–
1. ALL DIMENSION ARE IN MM. UNLESS OTHERWISE MENTIONED.

Revision					
Rev.	Date:	Description	Drawn	Checked	Approved

Client: Bihar State Road Development Corporation Ltd. PIU, Nawada

DGM (Tech) Bihar State Road Devp. Corp. Ltd. PIU, Nawada

Project Title : CONSULTANCY SERVICES FOR PREPARATION OF DETAILED PROJECT REPORT (DPR) FOR SH-103 (MANGHWE- GOVINDPUR)

Consultant: HOLTEC CONSULTING PRIVATE LIMITED

Designed	Checked	Approved
Y.J.	JIG	JIG
Drawn	Scale	Date
SVR	NTS	DEC. - 2021

Title : TYPICAL DETAILS OF TRAFFIC SIGNS (CLUSTER OF RED REFLECTORS)

Drawing No. HOL/BSRDCL/DFR/13510/MISC/CRR | Rev. | Sheet 06

CAD File Ref : | A3

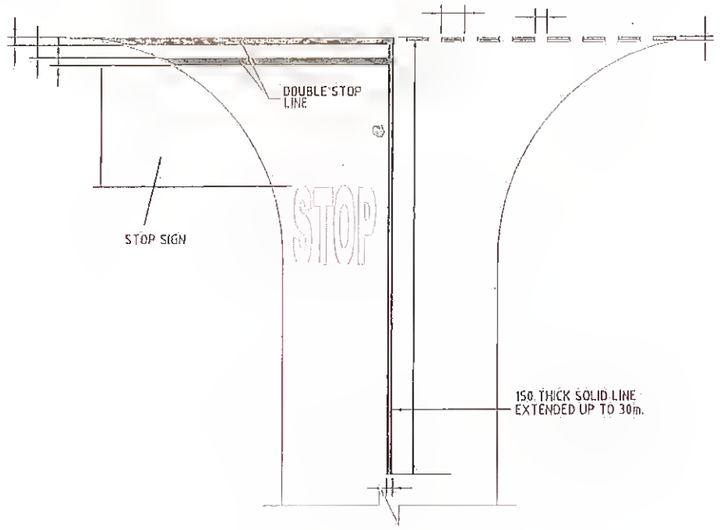

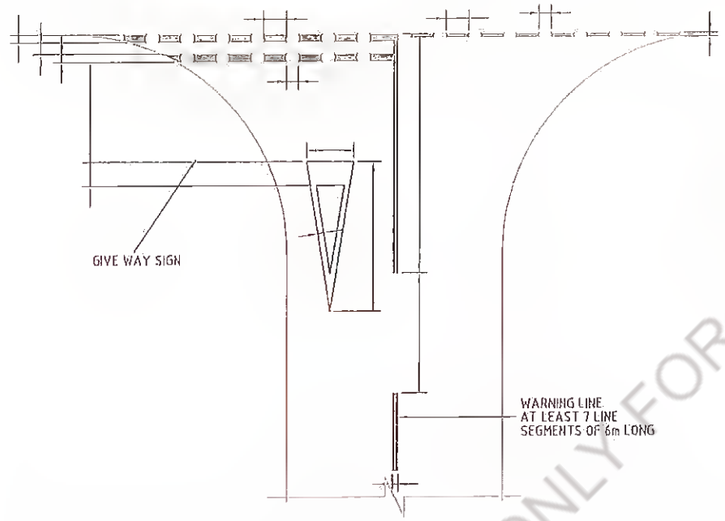

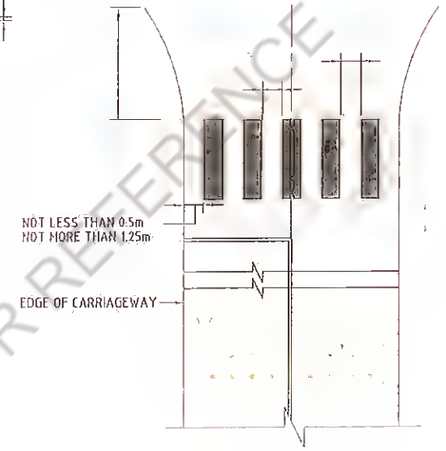

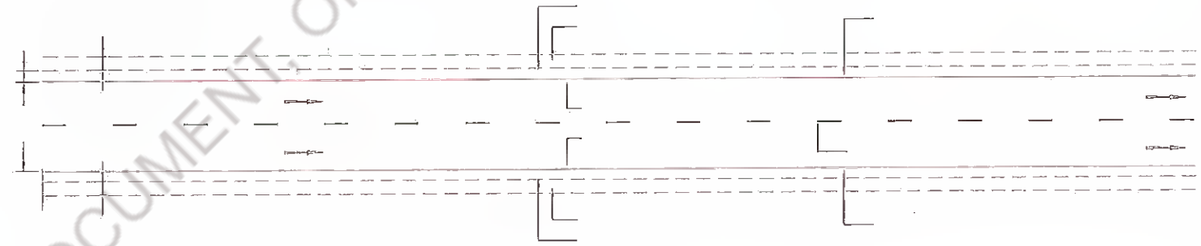

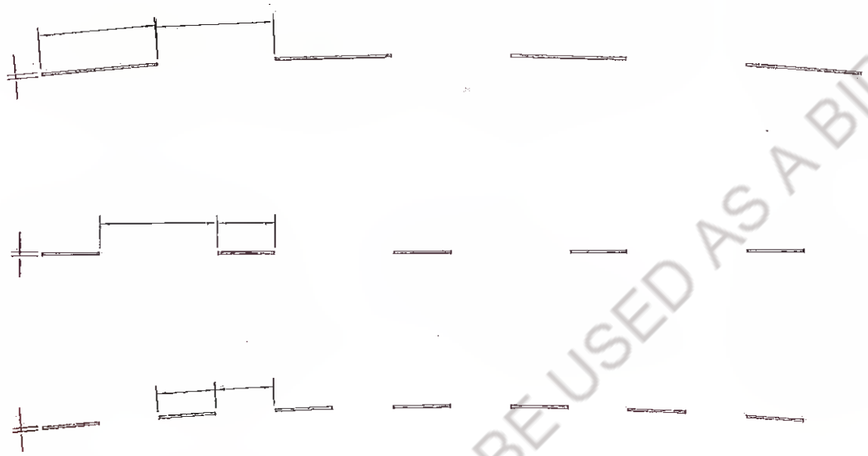

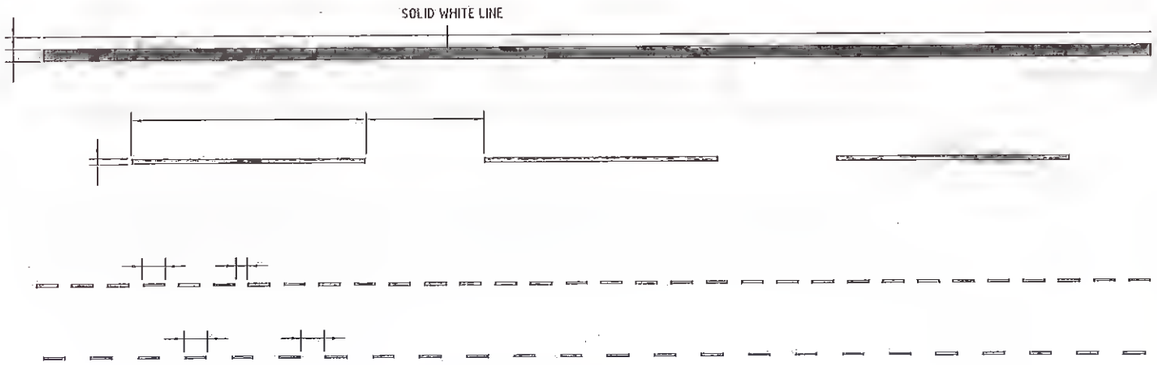

1. ROAD MARKING SHALL BE OF HOT APPLIED THERMOPLASTIC MATERIALS WITH GLASS REFLECTORISING BEADS OF TYPE 2 AS PER CLAUSES OF SECTION 803 OF MOSRTH SPECIFICATIONS.
2. ROAD MARKING ARE GENERALLY BESED ON IRC:35-1997.

Revision					
Rev.	Date:	Description	Drawn	Checked	Approved

Client:

DGM (Tech)
Bihar State Road Devp. Corp. Ltd.
PIU, Nawada

AGM (Tech)
Bihar State Road Devp. Corporation Ltd.
PIU, Nawada

Project Title :
CONSULTANCY SERVICES FOR PREPARATION OF DETAILED PROJECT REPORT (DPR) FOR SH-103 (MANGHWE- GOVINDPUR)

Consultant: HOLTEC CONSULTING PRIVATE LIMITED

Designed	Checked	Approved
YJ	JIG	JIG
Drawn: SVH	Scale: NTS	Date: DEC. - 2021

Title :
TYPICAL DETAILS OF ROAD MARKING

Drawing No. HOL/BSRDCL/DPR/13510/MISC/RM | Rev. | Sheet 04

CAD File Ref : | A3

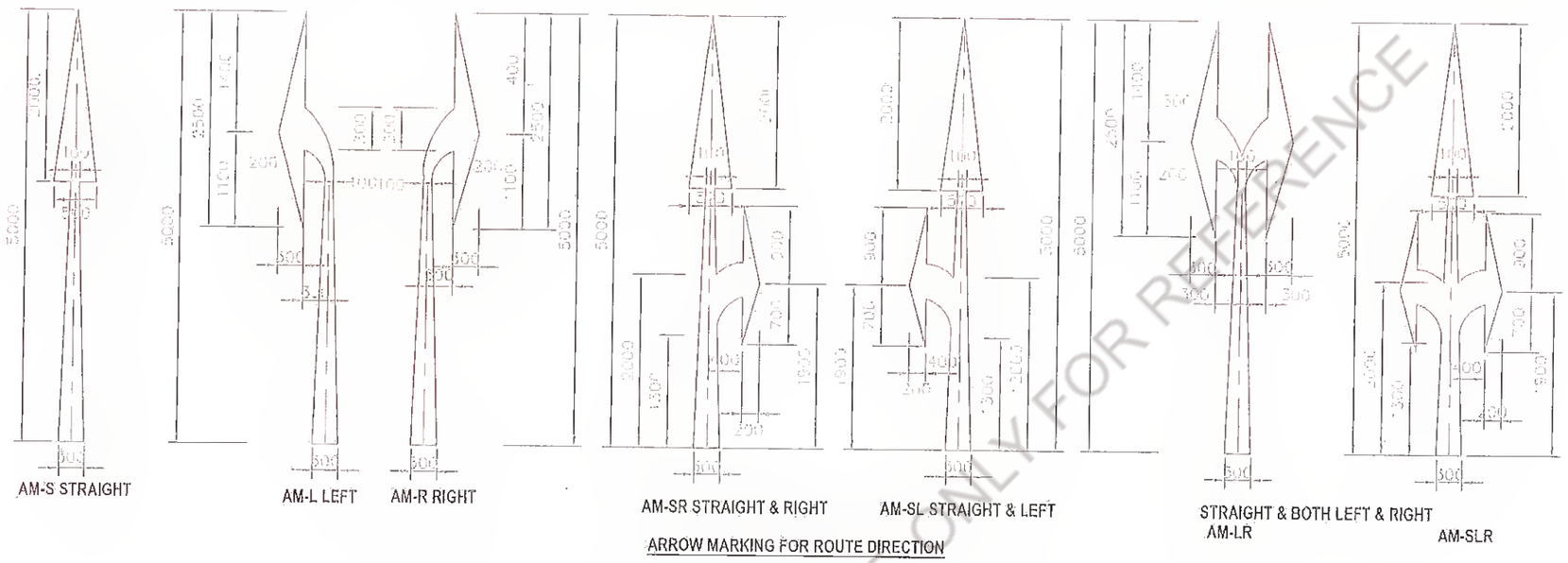

ARROW MARKING FOR ROUTE DIRECTION

NOTE: FOR SPEED UPTO 50KMS PER HOUR THE ARROWS SHOULD BE 3.5M IN LENGTH. FOR HIGHER SPEEDS, THE LENGTH SHOULD BE 5M.

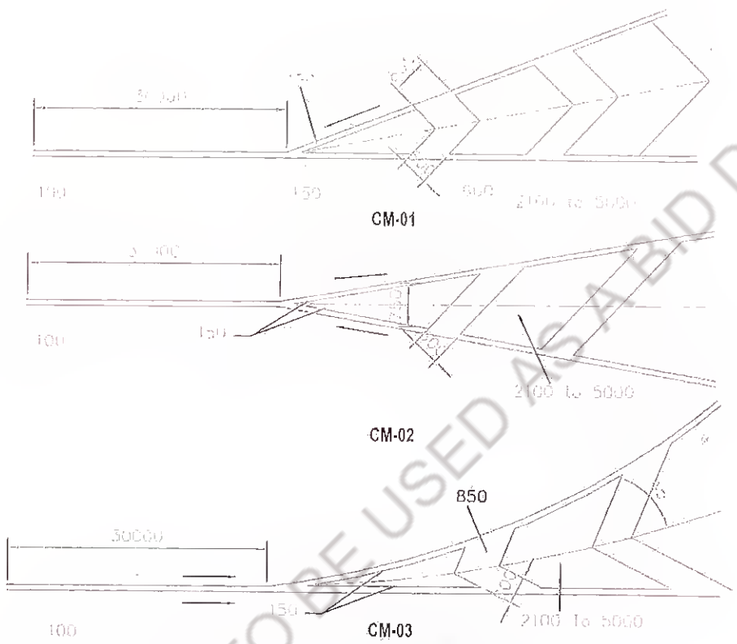

DETAILS OF DIAGONAL AND CHEVRON MARKING

Notes :

1. ROAD MARKING SHALL BE OF HOT APPLIED THERMOPLASTIC MATERIALS WITH GLASS REFLECTORISING BEADS OF TYPE 2 AS PER CLAUSES OF SECTION 803 OF MOSRTH SPECIFICATIONS.
2. ROAD MARKING ARE GENERALLY BESED ON IRC: 35–1997.

Revision					
Rev.	Date	Description	Drawn	Checked	Approved

Client: Bihar State Road Development Corporation Ltd. (BSRDCL) PIU, Nawada

Project Title : CONSULTANCY SERVICES FOR PREPARATION OF DETAILED PROJECT REPORT (DPR) FOR SH-103 (MANGHWE- GOVINDPUR)

Consultant: HOLTEC CONSULTING PRIVATE LIMITED

Designed	Checked	Approved
YJ	JIG	JIG
Drawn	Scale	Date
SVR	NTS	DEC.-2021

Title : TYPICAL DETAILS OF CHEVRON & ARROW MARKING FOR ROUTE DIRECTION MARKING

Drawing No. HOL/BSRDCL/DPR/13510/MISC/RDM | Rev. | Sheet 05

CAD File No. | A3

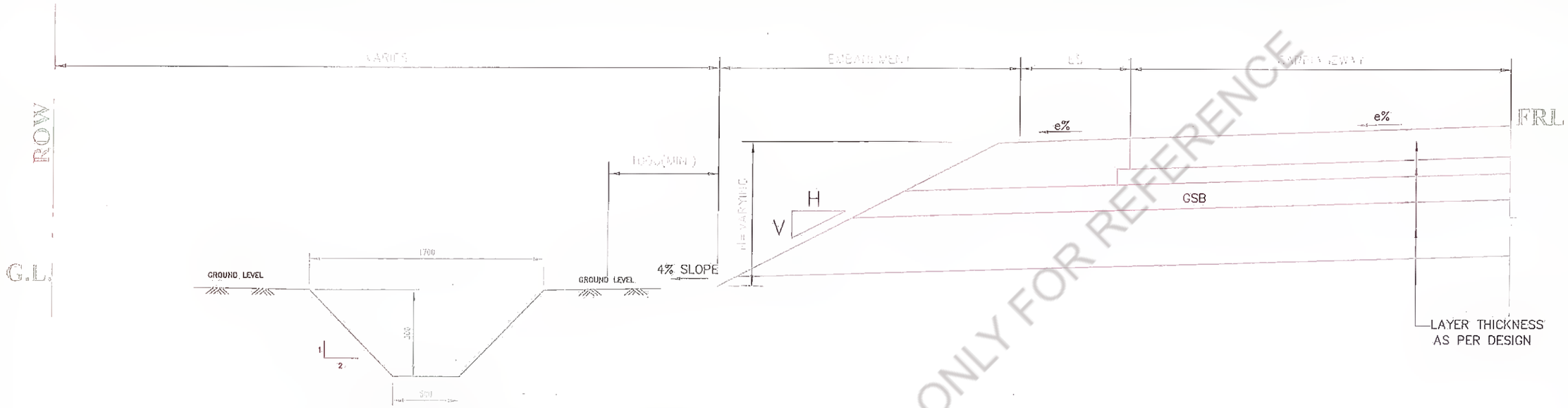

EARTHEN DRAIN

UNLINED DRAIN

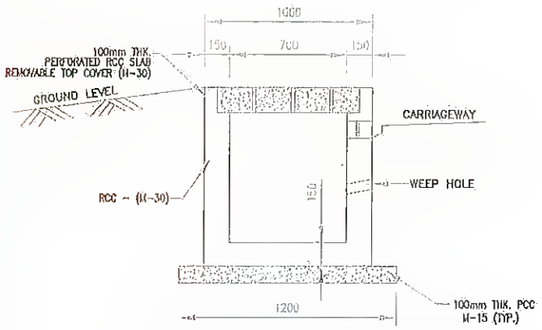

DRAIN IN BUILT-UP AREA

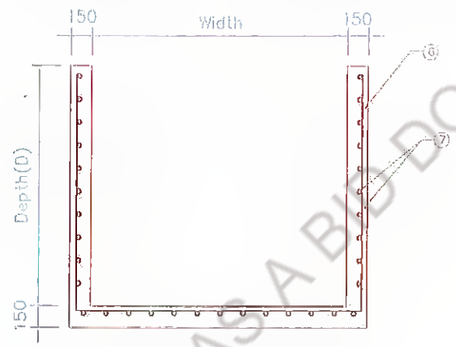

TYPICAL DETAIL OF DRAIN
(TYPE- A)

SCHEDULE OF REINFORCEMENT

DRAIN TYPE	DRAIN DEPTH(D)	BAR TYPE ⑥	BAR TYPE ⑦
PRE CAST	UP TO 1000mm	8ø @ 200 C/C	8ø @ 220 C/C
	1250mm	8ø @ 160 C/C	8ø @ 220 C/C
	1500mm	8ø @ 110 C/C	8ø @ 220 C/C
CAST IN SITU	UP TO 1000mm	8ø @ 200 C/C	8ø @ 220 C/C
	1250mm	8ø @ 150 C/C	8ø @ 220 C/C
	1500mm	8ø @ 105 C/C	8ø @ 220 C/C

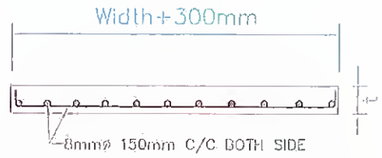

TYPICAL DETAILS OF PRE-CAST SLAB

DIMENSION DETAIL OF PRE-CAST SLAB

SL.NO.	LENGTH (MM)	WIDTH+300mm (MM)	THICKNESS (t) (MM)
1	1000	UP TO 1500	100

NOTES:-

1. ALL DIMENSION ARE IN MM. AND UNLESS OTHERWISE SPECIFIED.
2. GRADE OF CONCRETE-M30. UNLESS OTHERWISE MENTIONED
3. THE REINFORCEMENT STEEL SHALL BE OF TMT H.Y.S.D BARS (GRADE DESIGNATION Fe-500)
4. CLEAR COVER - 20mm

GL - FINISHED GROUND LEVEL
FRL - FINISHED ROAD LEVEL.

Revision					
Rev.	Date	Description	Drawn	Checked	Approved

Client: Bihar State Road Development Corporation Ltd. PIU, Nawada

Project Title : CONSULTANCY SERVICES FOR PREPARATION OF DETAILED PROJECT REPORT (DPR) FOR SH-103 (MANGHWE- GOVINDPUR)

Consultant: HOLTEC CONSULTING PRIVATE LIMITED

Designed	Checked	Approved
AS	JIG	JIG
Drawn: SHD	Scale: NTS	Date: MAY. - 2017

Title : TYPICAL DETAIL OF UNLINED & RCC RECTANGULAR DRAIN

Drawing No. HOL/BSRDCL/DPR/13510/MISC/DRAIN | Rev. | Sheet 01 | A3

SIGNAGE PLAN

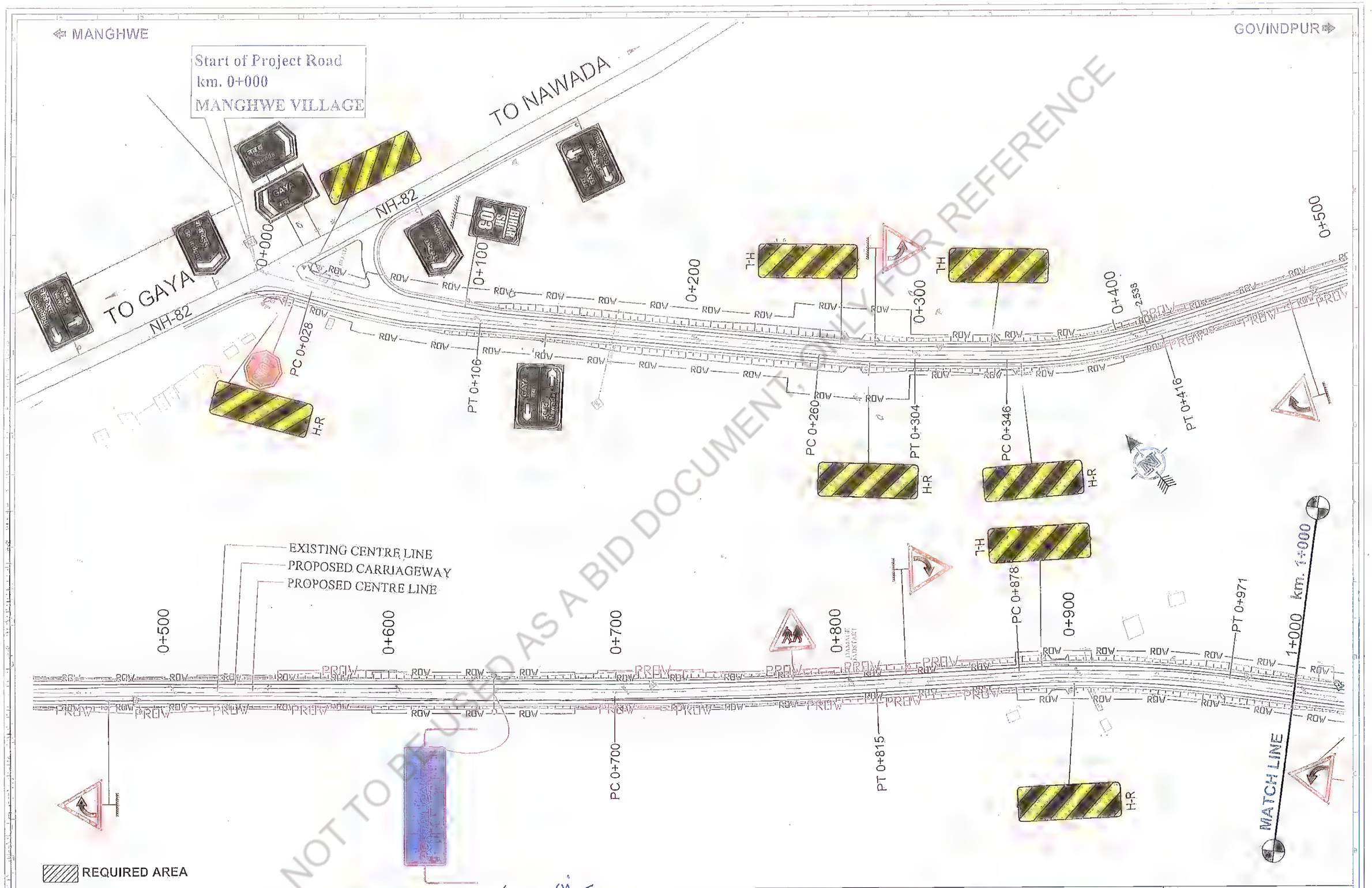

Revision					
Rev.	Date	Description	Drawn	Checked	Approved

Client: Bihar State Road Dev. Corp. Ltd. PIU, Nawada

Project Title : CONSULTANCY SERVICES FOR PREPARATION OF DETAILED PROJECT REPORT (DPR) FOR SH-103 (MANGHWE- GOVINDPUR)

Consultant: HOLTEC CONSULTING PRIVATE LIMITED

Designed	Checked	Approved
GBK	SM	JIG
Drawn	Scale	Date
GBK	NTS	APRIL - 2014

Title : SIGNAGE PLAN SH-103 (MANGHWE - GOVINDPUR) (AT CH.- 0+000 TO 1+000)

Drawing No. HOL/BSRDCL/DPR/13510/SP | Rev. 0 | Sheet 01

DD Ref. Ref : | A3

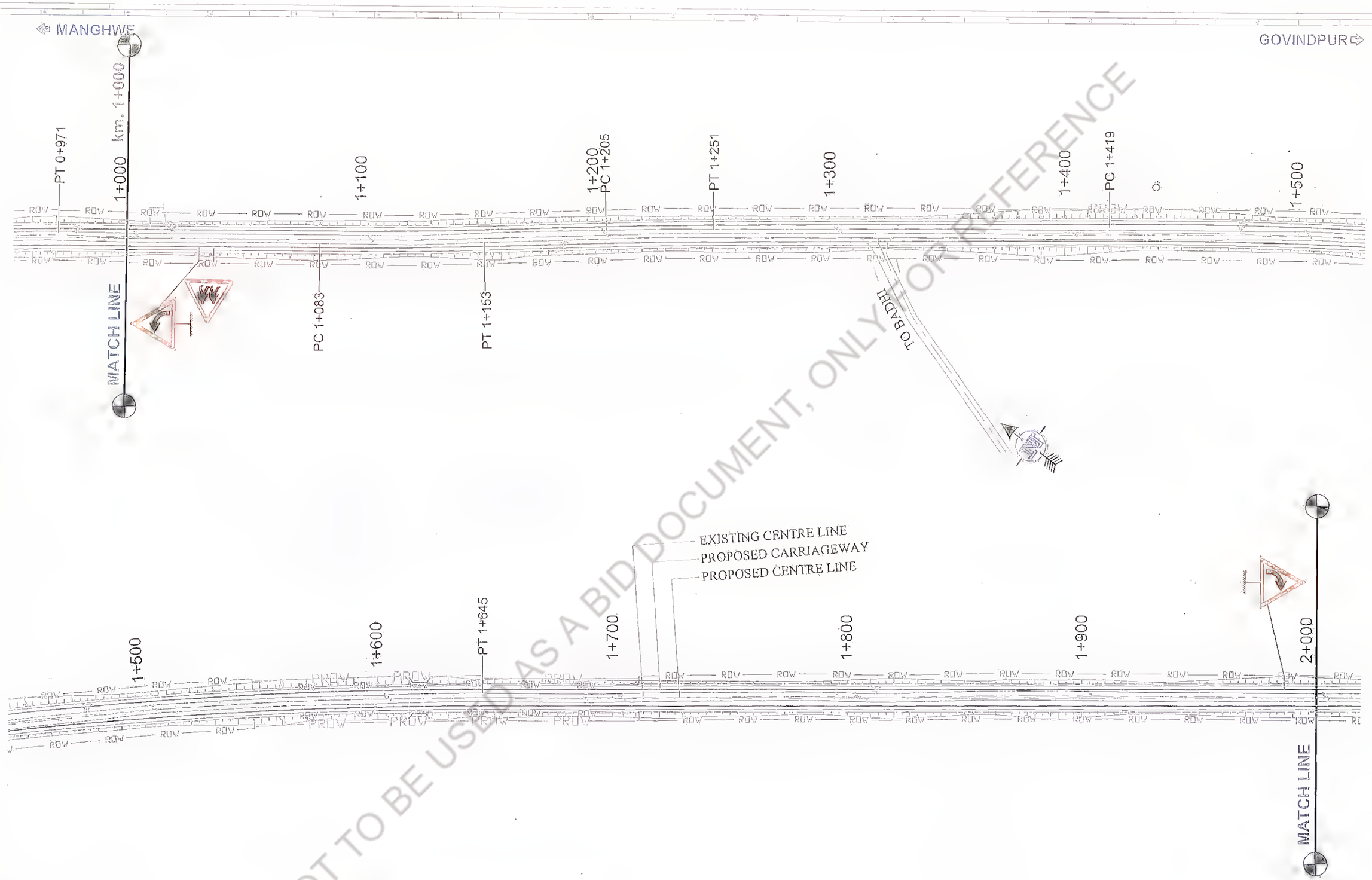

REQUIRED AREA

Revision					
Rev.	Date	Description	Drawn	Checked	Approved

Client: Bihar State Road Development Corporation Ltd. Patna

DGM (Tech) Bihar State Road Dev. Corp. Ltd. Nawada

Project Title : CONSULTANCY SERVICES FOR PREPARATION OF DETAILED PROJECT REPORT (DPR) FOR SH-103 (MANGHWE- GOVINDPUR)

Consultant: HOLTEC CONSULTING PRIVATE LIMITED

Designed	Checked	Approved
GBK	SM	JIG
Drawn: GBK	Scale: NTS	Date: APRIL - 2014

Title : SIGNAGE PLAN SH-103 (MANGHWE - GOVINDPUR) (AT CH.- 1+000 TO 2+000)

Drawing No. HOL/BSRDCL/DPR/13510/SP | Rev. 0 | Sheet 02

CAD file ref : | A3

Revision					
Rev.	Date	Description	Drawn	Checked	Approved

Client: Bihar State Road Development Corporation Ltd. PIU, Nawada

Project Title : CONSULTANCY SERVICES FOR PREPARATION OF DETAILED PROJECT REPORT (DPR) FOR SH-103 (MANGHWE- GOVINDPUR)

Consultant: HOLTEC CONSULTING PRIVATE LIMITED

Designed	Checked	Approved
GBK	SM	JIG
Drawn	Scale	Date
GBK	NTS	APRIL - 2014

Title : SIGNAGE PLAN SH-103 (MANGHWE - GOVINDPUR) (AT CH.- 2+000 TO 3+000)

Drawing No. HOL/BSRDCL/DPR/13510/SP | Rev. 0 | Sheet 03

CAD File Ref. : | A3

Revision					
Rev.	Date:	Description	Drawn	Checked	Approved

Client: Bihar State Road Development Corporation Ltd. (BSRDCL) DGM (Tech) PIU Nawada

Project Title : CONSULTANCY SERVICES FOR PREPARATION OF DETAILED PROJECT REPORT (DPR) FOR SH-103 (MANGHWE- GOVINDPUR)

Consultant: HOLTEC CONSULTING PRIVATE LIMITED

Designed	Checked	Approved
GBK	SM	JIG
Drawn: GBK	Scale: NTS	Date: APRIL - 2014

Title : SIGNAGE PLAN SH-103 (MANGHWE - GOVINDPUR) (AT CH.- 3+000 TO 4+000)

Drawing No. HOL/BSRDCL/DPR/13510/SP | Rev. 0 | Sheet 04

Old File Ref : | A3

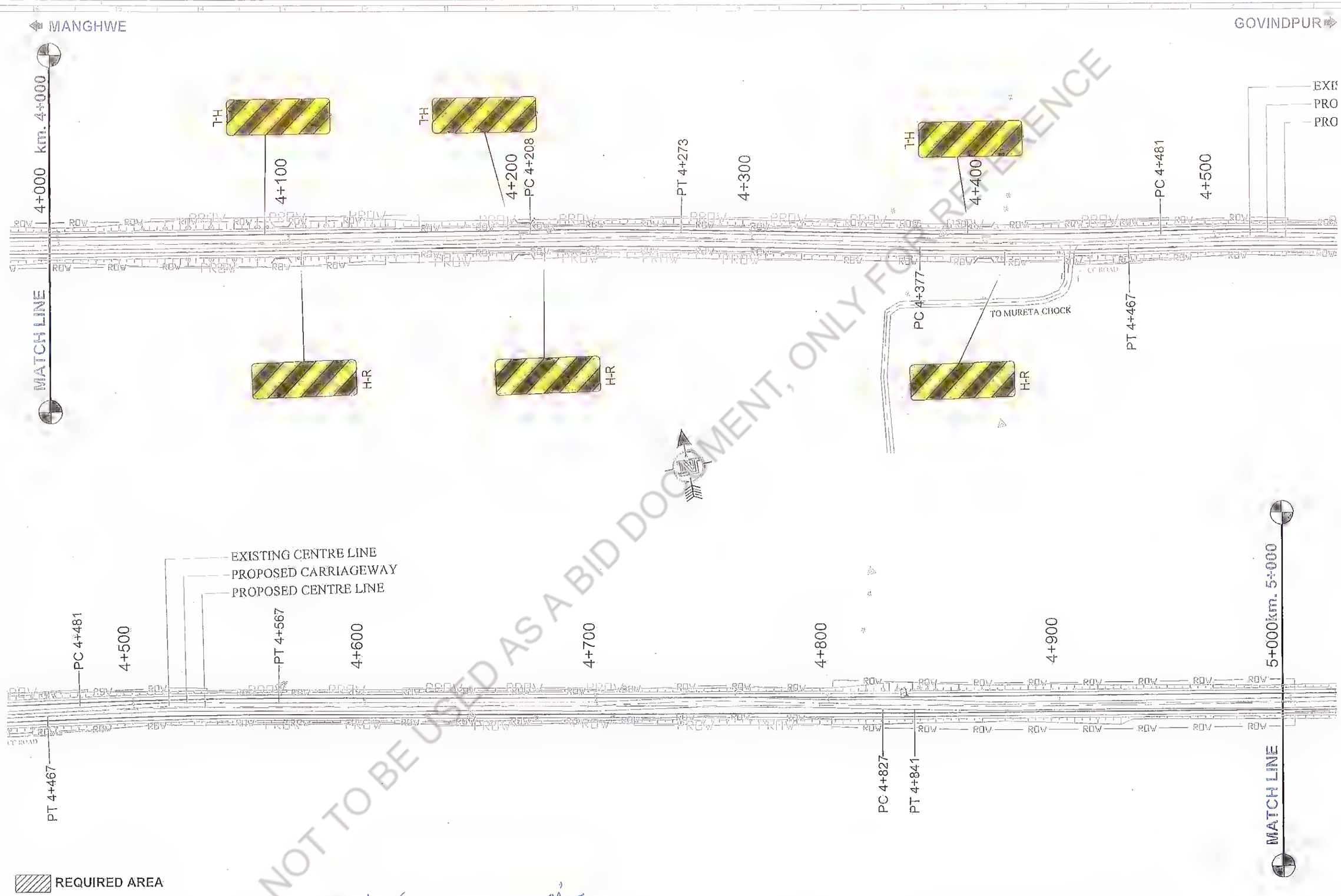

Revision					
Rev.	Date:	Description	Drawn	Checked	Approved

Client: Bihar State Road Development Corporation Ltd. PIU, Nawada

Project Title : CONSULTANCY SERVICES FOR PREPARATION OF DETAILED PROJECT REPORT (DPR) FOR SH-103 (MANGHWE- GOVINDPUR)

Consultant: HOLTEC CONSULTING PRIVATE LIMITED

Designed	Checked	Approved
GBK	SM	JIG
Drawn: GBK	Scale: NTS	Date: APRIL - 2014

Title : SIGNAGE PLAN SH-103 (MANGHWE - GOVINDPUR) (AT CH.- 4+000 TO 5+000)

Drawing No. HOL/BSRDCL/DPR/13510/SP | Rev. 0 | Sheet 05

CAD File Ref : | A3

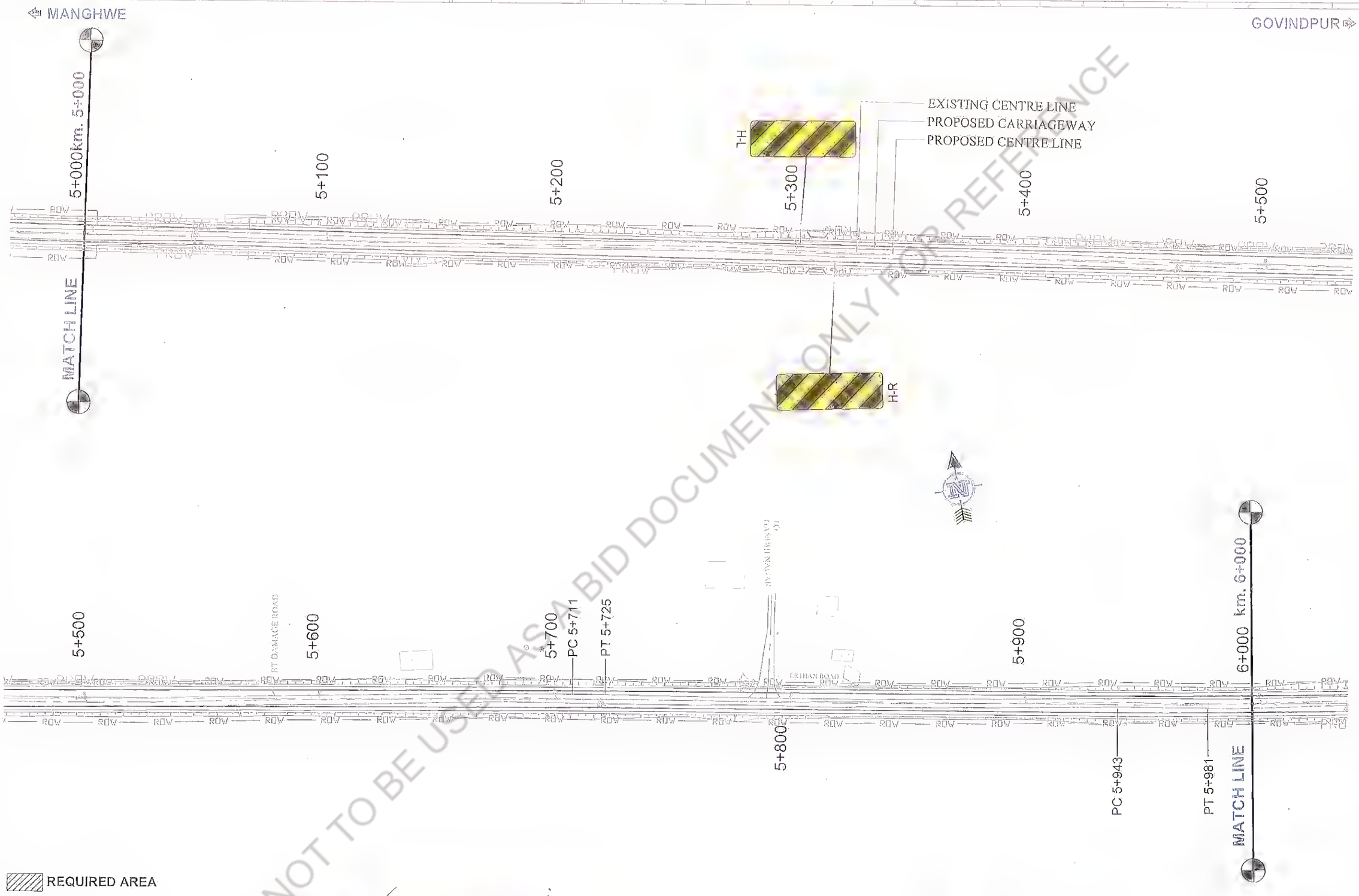

Revision					
Rev.	Date:	Description	Drawn	Checked	Approved

Client: Bihar State Road Development Corporation Ltd. PIU, Nawada

DGM (Tech) Bihar State Road Devp. Corporation Ltd. Nawada

Project Title : CONSULTANCY SERVICES FOR PREPARATION OF DETAILED PROJECT REPORT (DPR) FOR SH-103 (MANGHWE- GOVINDPUR)

Consultant: HOLTEC CONSULTING PRIVATE LIMITED

Designed	Checked	Approved
GBK	SM	JIG
Drawn GBK	Scale NTS	Date APRIL - 2014

Title : SIGNAGE PLAN SH-103 (MANGHWE - GOVINDPUR) (AT CH.- 5+000 TO 6+000)

Drawing No. HOL/BSRDCL/DPR/13510/SP | Rev. 0 | Sheet 06

CAD File Ref : | A3

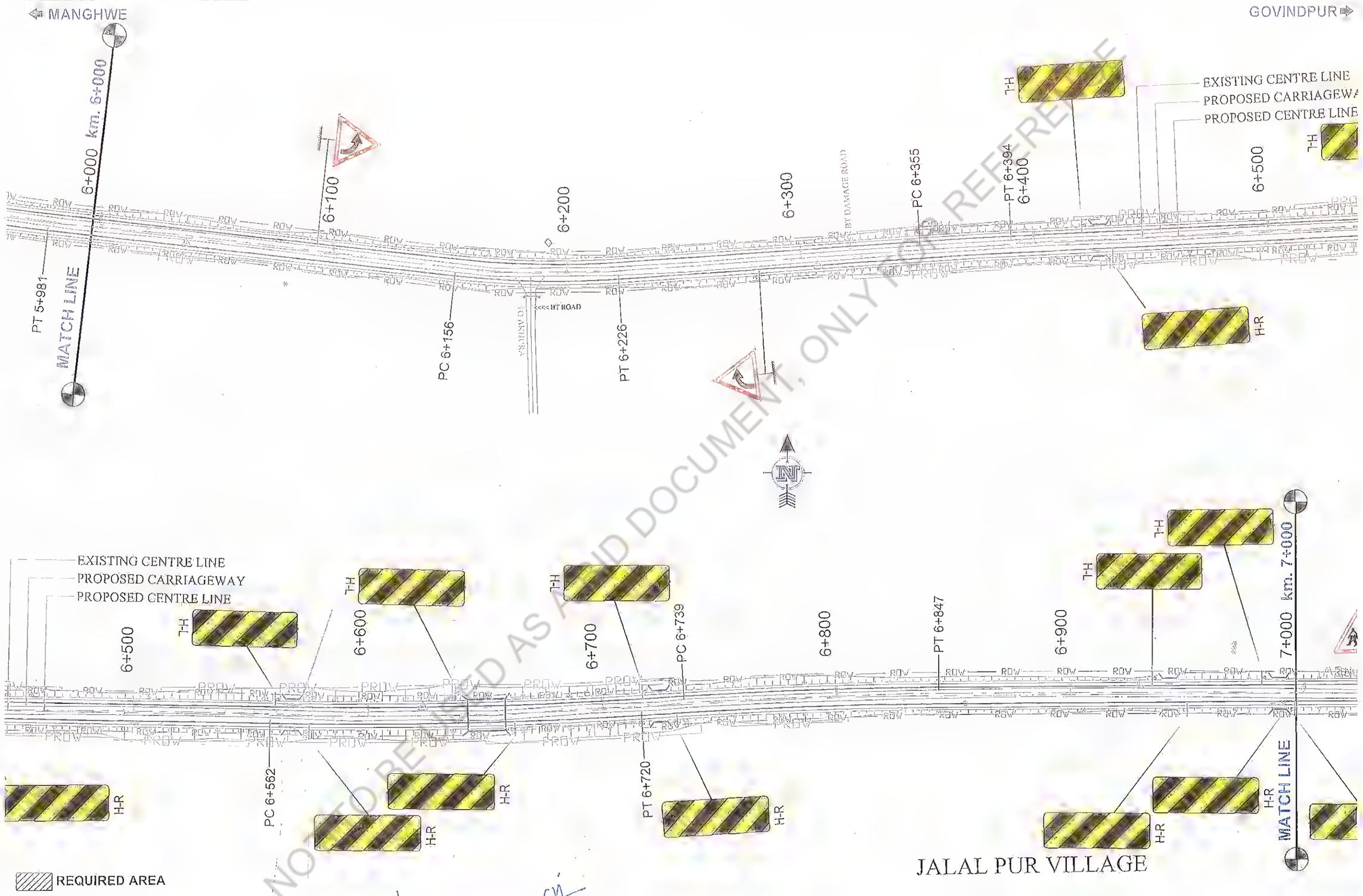

Revision					
Rev.	Date:	Description	Drawn	Checked	Approved

Client: Bihar State Road Development Corporation Ltd. PIU, Nawada

Project Title : CONSULTANCY SERVICES FOR PREPARATION OF DETAILED PROJECT REPORT (DPR) FOR SH-103 (MANGHWE- GOVINDPUR)

Consultant: HOLTEC CONSULTING PRIVATE LIMITED

Designed	Checked	Approved
GBK	SM	JIG
Drawn: GBK	Scale: NTS	Date: APRIL - 2014

Title : SIGNAGE PLAN SH-103 (MANGHWE - GOVINDPUR) (AT CH.- 6+000 TO 7+000)

Drawing No. HOL/BSRDCL/DPR/13510/SP | Rev. 0 | Sheet 07

CAD File Ref : | A3

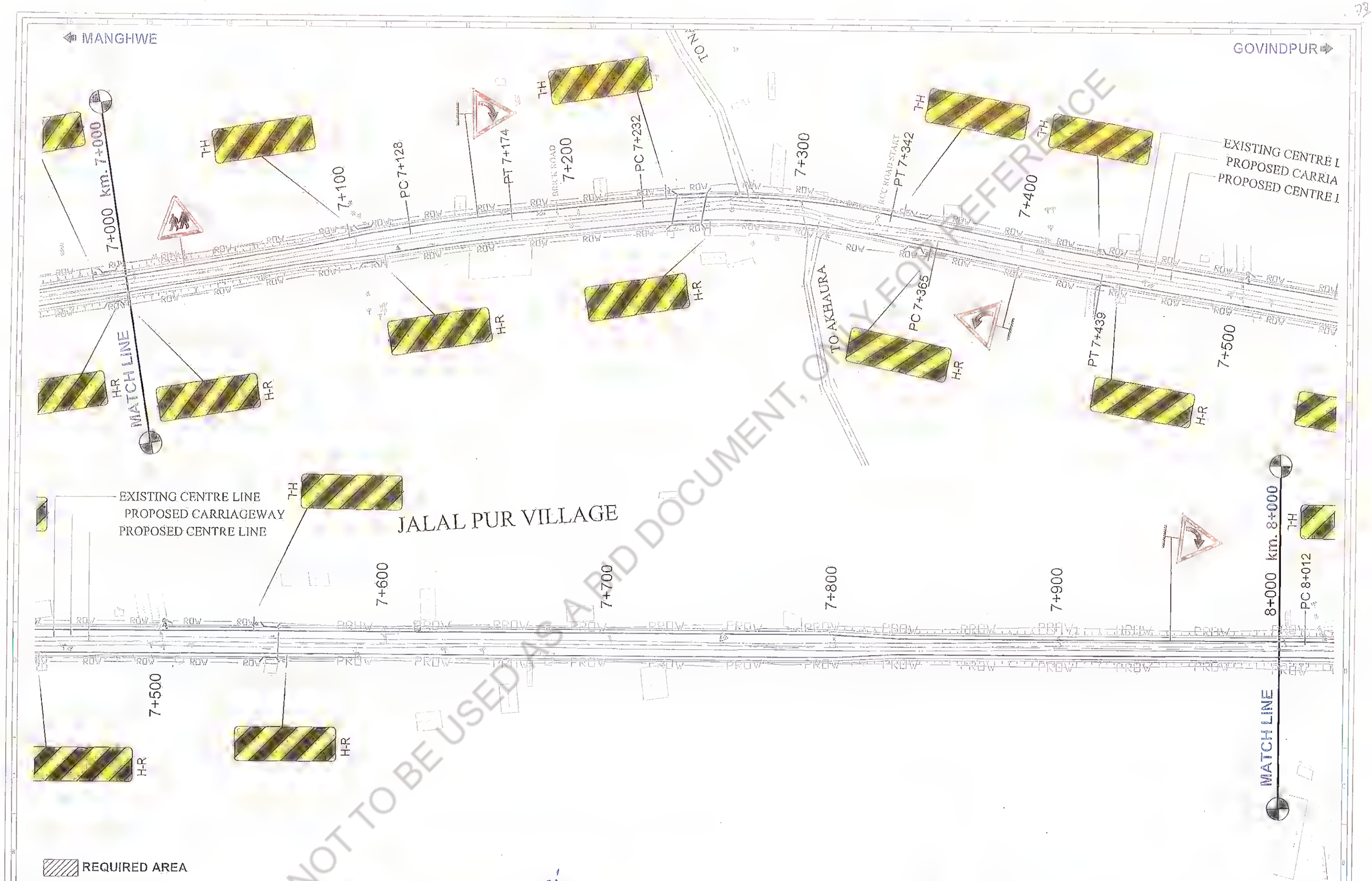

Revision					
Rev.	Date:	Description	Drawn	Checked	Approved

Client: Bihar State Road Development Corporation Ltd. PIU, Nawada

Project Title: CONSULTANCY SERVICES FOR PREPARATION OF DETAILED PROJECT REPORT (DPR) FOR SH-103 (MANGHWE- GOVINDPUR)

Consultant: HOLTEC CONSULTING PRIVATE LIMITED

Designed	Checked	Approved
GBK	SM	JIG
Drawn	Scale	Date
GBK	NTS	APRIL - 2014

Title: SIGNAGE PLAN SH-103 (MANGHWE - GOVINDPUR) (AT CH.- 7+000 TO 8+000)

Drawing No. HOL/BSRDCL/DPR/13510/SP | Rev. 0 | Sheet 08

CAD File Ref: | A3

MANGHWE

GOVINDPUR

PROPOSED CARRIAGEWAY

PROPOSED CENTRE LINE

EXISTING CENTRE LINE

MATCH LINE

8+000 km. 8+000

PC 8+012

PT 8+089

8+100

8+200

8+300

PC 8+383

8+400

PT 8+476

8+500

PT 8+476

8+500

8+600

8+700

PC 8+628

PT 8+722

PC 8+794

8+800

PT 8+827

8+900

PC 8+925

PT 8+967

PC 8+997

9+000 km. 9+000

MATCH LINE

T-H

H-R

H-L

TO MISHARICHO

JALAL PUR VILLAGE

REQUIRED AREA

Revision					
Rev.	Date:	Description	Drawn	Checked	Approved

Client: Bihar State Road Development Corporation Ltd. PIU, Nawada

Project Title : CONSULTANCY SERVICES FOR PREPARATION OF DETAILED PROJECT REPORT (DPR) FOR SH-103 (MANGHWE- GOVINDPUR)

Consultant: HOLTEC CONSULTING PRIVATE LIMITED

Designed	Checked	Approved
GHK	SM	JIG
Drawn: GBK	Scale: NTS	Date: APRIL - 2014

Title : SIGNAGE PLAN SH-103 (MANGHWE - GOVINDPUR) (AT CH.- 8+000 TO 9+000)

Drawing No. HOL/BSRDCL/DPR/13510/SP | Rev. 0 | Sheet 09

Old Re Ref : | A3

Revision					
Rev.	Date:	Description	Drawn	Checked	Approved

Client:

Bihar State Road Development Corporation Ltd.
PIU, Nawada

DGM (Tech)
Bihar State Road Dev. Corp. Ltd.
PIU, Nawada

Project Title :
CONSULTANCY SERVICES FOR PREPARATION OF DETAILED PROJECT REPORT (DPR) FOR SH-103 (MANGHWE- GOVINDPUR)

Consultant: HOLTEC CONSULTING PRIVATE LIMITED

Designed	Checked	Approved
GBK	SM	JIG
Drawn	Scale	Date
GBK	NTS	APRIL, - 2014

Title : SIGNAGE PLAN
SH-103 (MANGHWE - GOVINDPUR)
(AT CH.- 9+000 TO 10+000)

Drawing No. HOL/BSRDCL/DPR/13510/SP
Rev. 0
Sheet 10
CAD File Ref :
A3

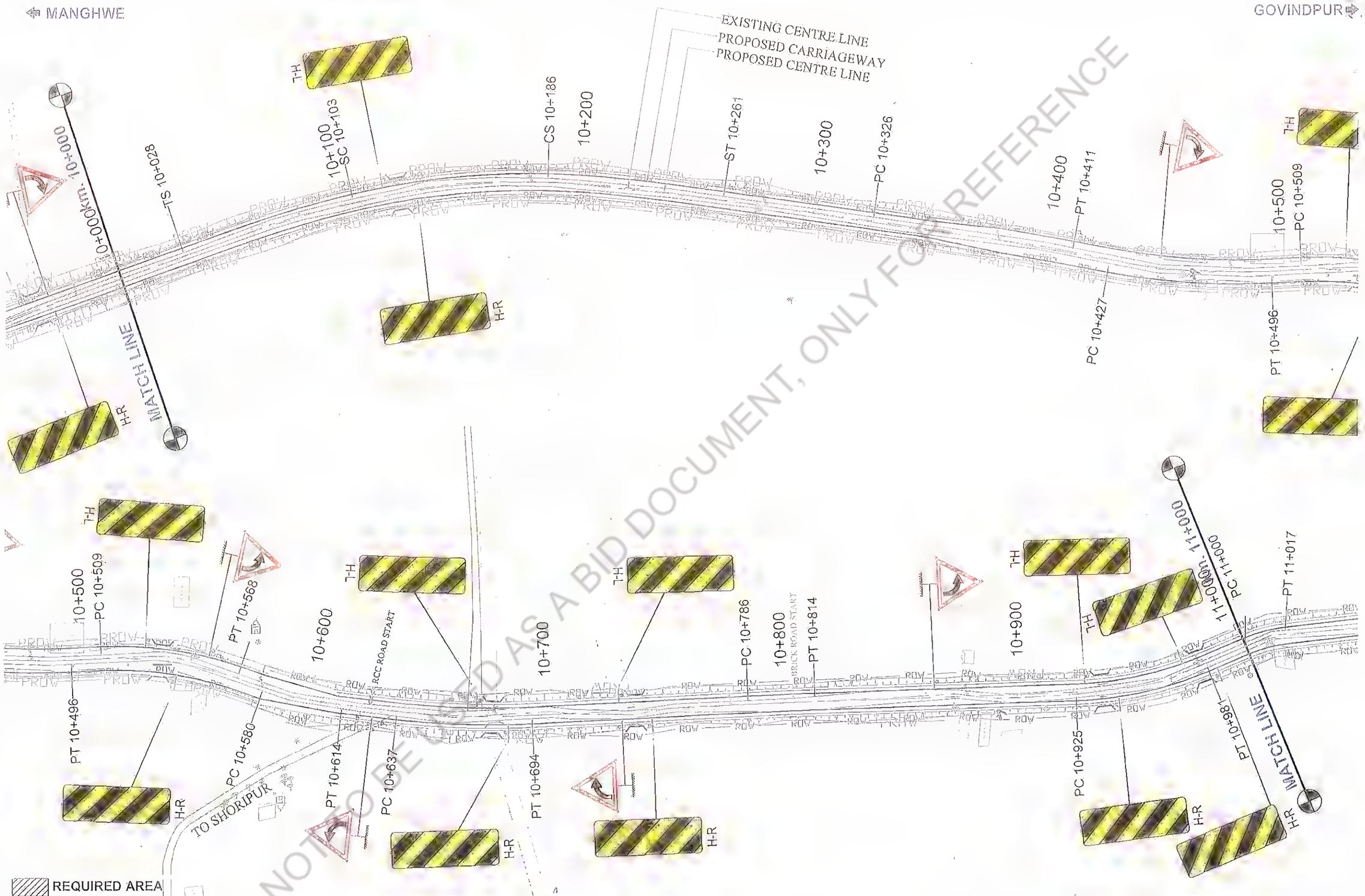

Revision					
Rev.	Date:	Description	Drawn	Checked	Approved

Client: Bihar State Road Development Corporation Ltd. Patna

Project Title : CONSULTANCY SERVICES FOR PREPARATION OF DETAILED PROJECT REPORT (DPR) FOR SH-103 (MANGHWE- GOVINDPUR)

Consultant: HOLTEC CONSULTING PRIVATE LIMITED

Designed	Checked	Approved
GBK	SM	JIG
Drawn	Scale	Date
GBK	NTS	APRIL - 2014

Title : SIGNAGE PLAN SH-103 (MANGHWE - GOVINDPUR) (AT CH.- 10+000 TO 11+000)

Drawing No. HOL/BSRDCL/DPR/13510/SP | Rev. 0 | Sheet 11

DWG File Ref : | A3

Revision					
Rev.	Date:	Description	Drawn	Checked	Approved

Client: Bihar State Road Development Corporation Ltd. (BSRDCL)

DGM (Tech) Bihar State Road Devp. Corporation Ltd. Nawada

Project Title : CONSULTANCY SERVICES FOR PREPARATION OF DETAILED PROJECT REPORT (DPR) FOR SH-103 (MANGHWE- GOVINDPUR)

Consultant: HOLTEC CONSULTING PRIVATE LIMITED

Designed	Checked	Approved
GBK	SM	JIG
Drawn: GBK	Scale: NTS	Date: APRIL - 2014

Title : SIGNAGE PLAN SH-103 (MANGHWE - GOVINDPUR) (AT CH.- 11+000 TO 12+000)

Drawing No. HOL/BSRDCL/DPR/13510/SP | Rev. 0 | Sheet 12

CAD File Ref.: | A3

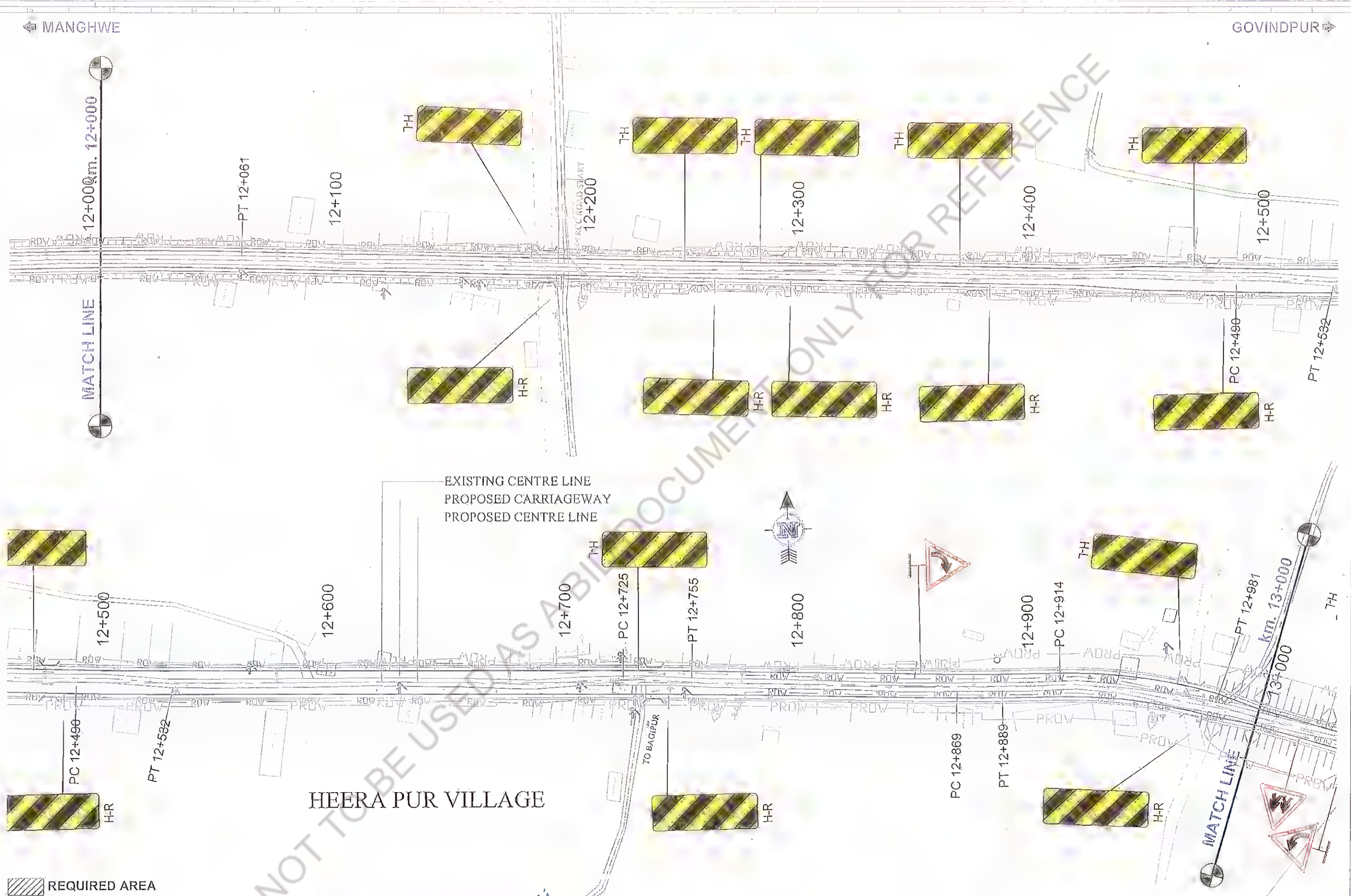

Revision					
Rev.	Date.	Description	Drawn	Checked	Approved

Client: Bihar State Road Development Corporation Ltd., Nawada

Project Title : CONSULTANCY SERVICES FOR PREPARATION OF DETAILED PROJECT REPORT (DPR) FOR SH-103 (MANGHWE- GOVINDPUR)

Consultant: HOLTEC CONSULTING PRIVATE LIMITED

Designed	Checked	Approved
GBK	SM	JIG
Drawn	Scale	Date
GBK	NTS	APRIL - 2014

Title : SIGNAGE PLAN SH-103 (MANGHWE - GOVINDPUR) (AT CH.- 12+000 TO 13+000)

Drawing No.	Rev.	Sheet
HOL/BSRDCL/DPR/13510/SP	0	13

CAD File Ref : A3

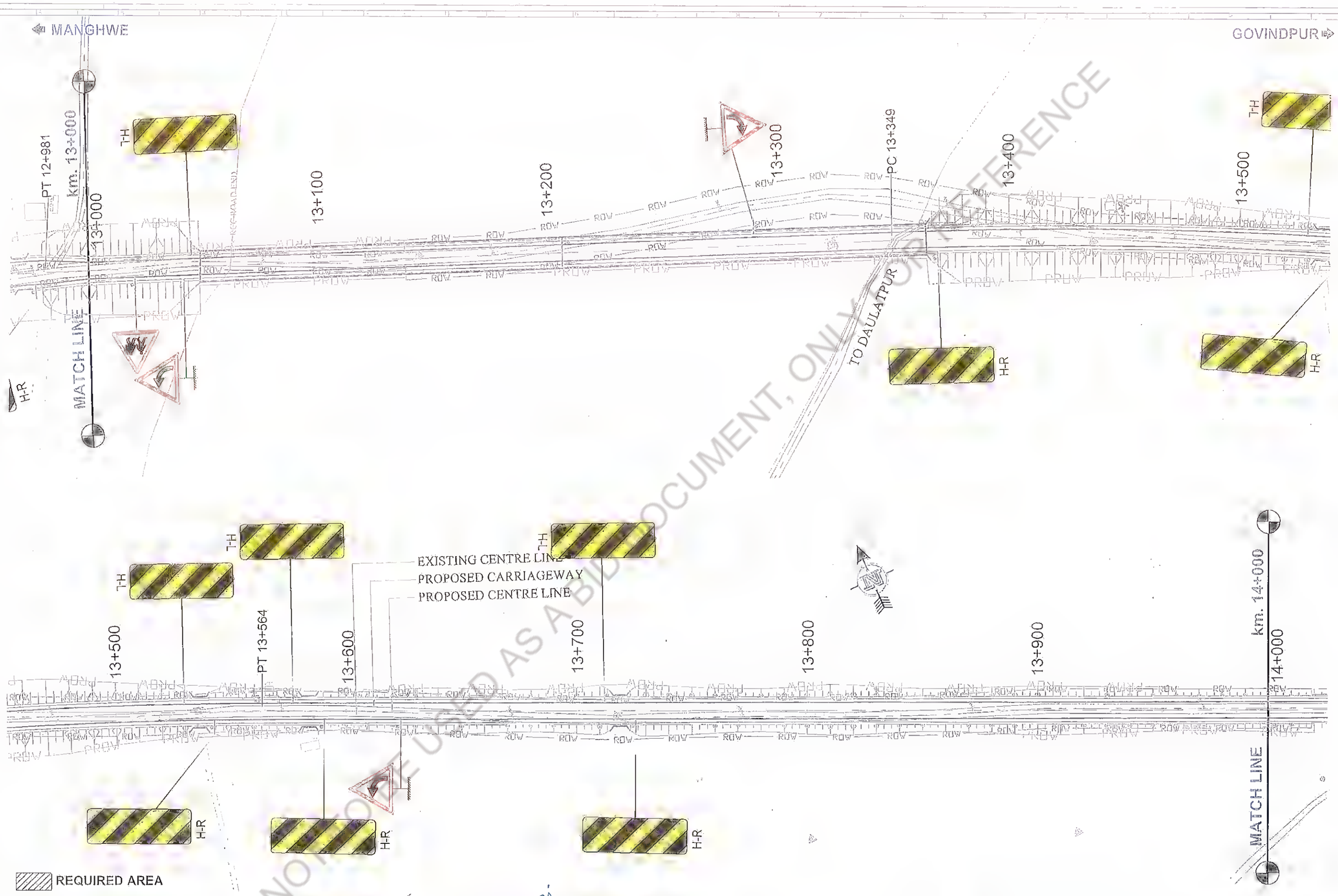

Revision					
Rev.	Date.	Description	Drawn	Checked	Approved

Client: Bihar State Road Development Corporation Ltd. Nawada

DGM (Tech) Bihar State Road Development Corporation Ltd. Nawada

Project Title : CONSULTANCY SERVICES FOR PREPARATION OF DETAILED PROJECT REPORT (DPR) FOR SH-103 (MANGHWE- GOVINDPUR)

Consultant: HOLTEC CONSULTING PRIVATE LIMITED

Designed	Checked	Approved
CHK	SM	JRG
Drawn	Scale	Date
GBK	NTS	APRIL - 2014

Title : SIGNAGE PLAN SH-103 (MANGHWE - GOVINDPUR) (AT CH.- 13+000 TO 14+000)

Drawing No. HOL/BSRDCL/DPR/13510/SP | Rev. 0 | Sheet 14

CAD File Ref : | A3

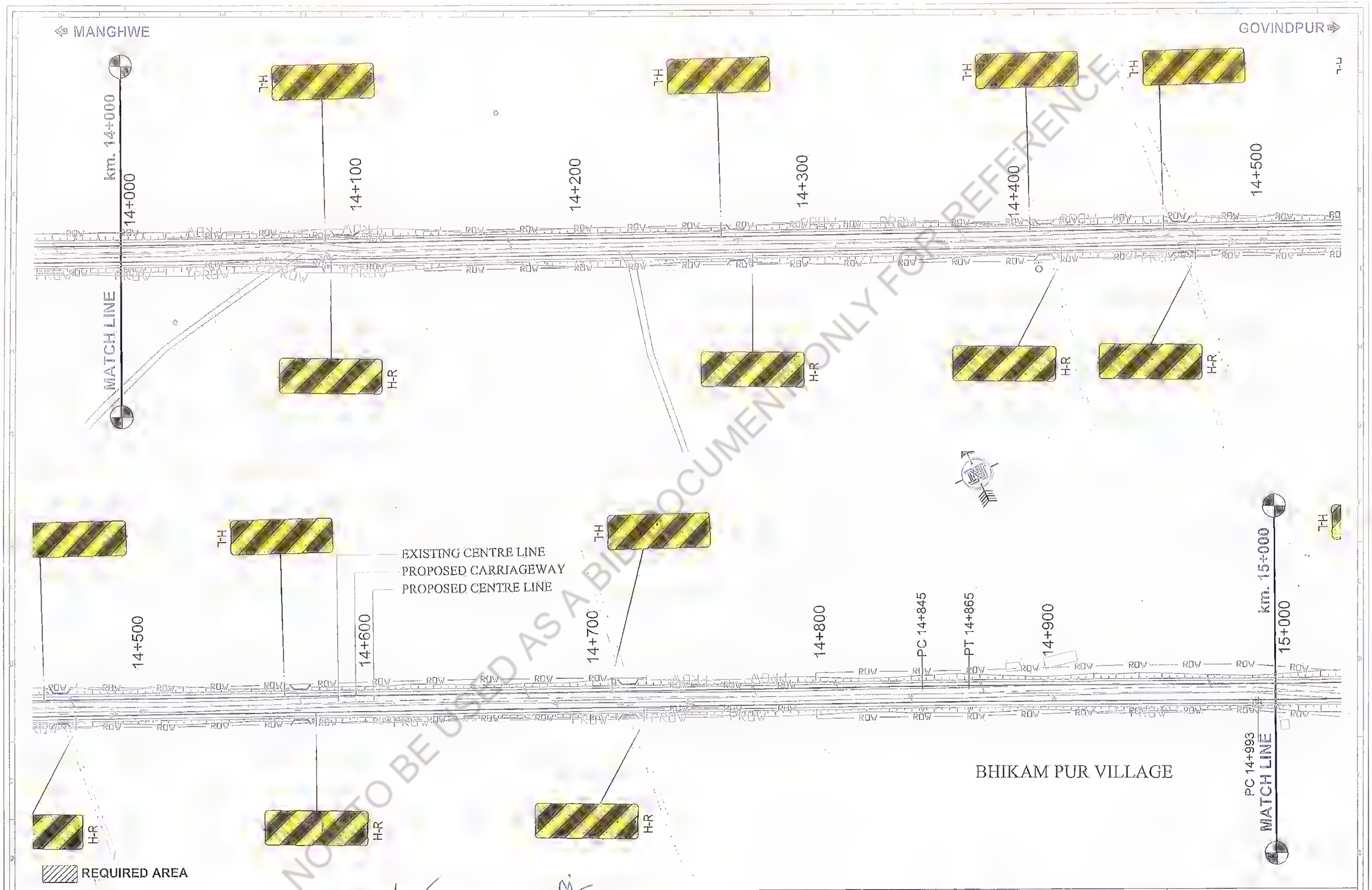

Revision					
Rev.	Date	Description	Drawn	Checked	Approved

Client: Bihar State Road Development Corporation Ltd. Plot, Nawada

MANAGER (TECH) DG (Tech) Bihar State Road Devp. Corporation Ltd. Nawada

Project Title : CONSULTANCY SERVICES FOR PREPARATION OF DETAILED PROJECT REPORT (DPR) FOR SH-103 (MANGHWE- GOVINDPUR)

Consultant: HOLTEC CONSULTING PRIVATE LIMITED

Designed	Checked	Approved
GBK	SM	JIG
Drawn: GBK	Scale: NTS	Date: APRIL - 2014

Title : SIGNAGE PLAN SH-103 (MANGHWE - GOVINDPUR) (AT CH.- 14+000 TO 15+000)

Drawing No. HOL/BSRDCL/DPR/13510/SP | Rev. 0 | Sheet 15

DB File Ref : | A3

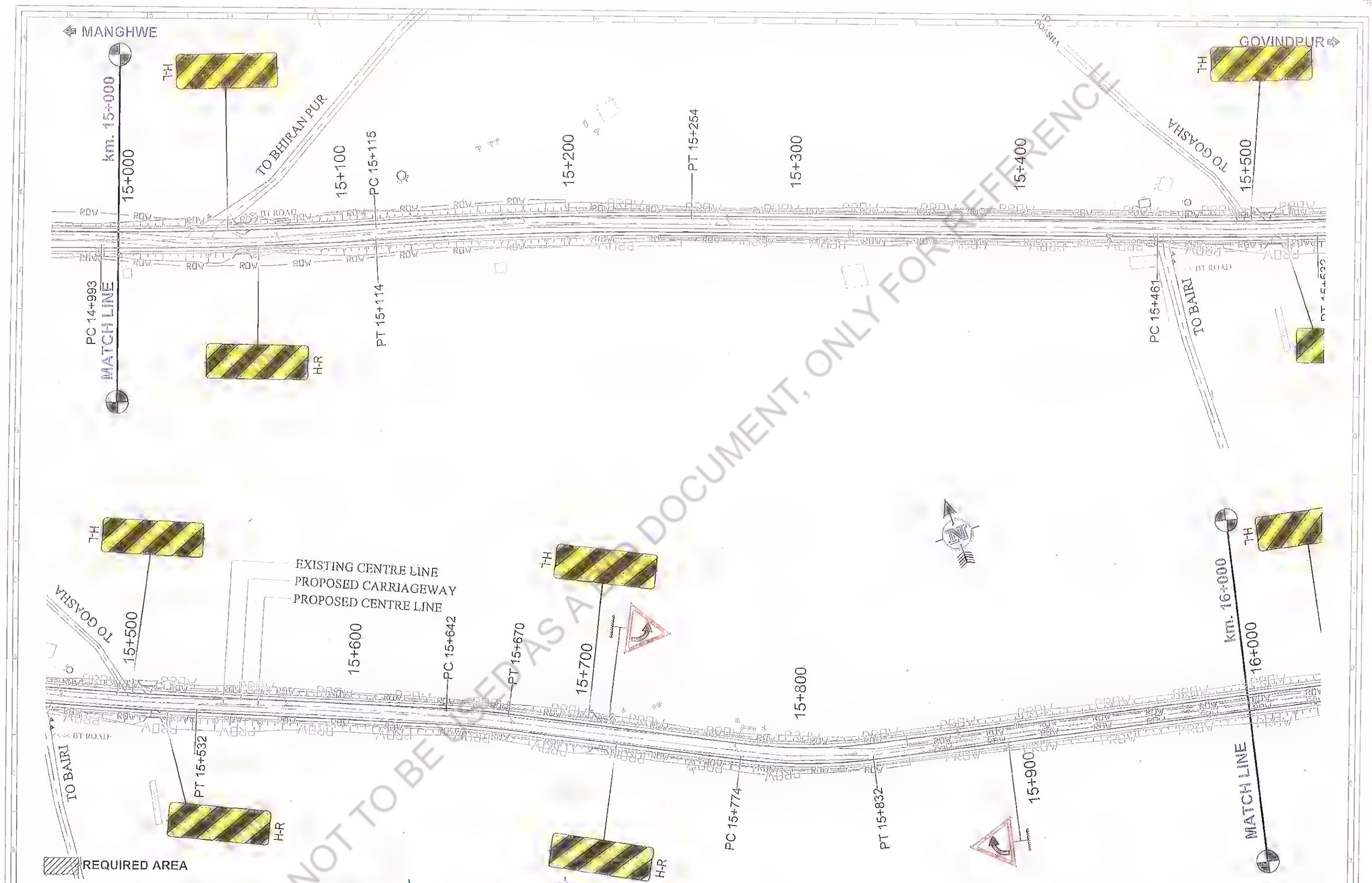

Revision					
Rev.	Date:	Description	Drawn	Checked	Approved

Client: Bihar State Road Development Corporation Ltd. Nawada

Project Title : CONSULTANCY SERVICES FOR PREPARATION OF DETAILED PROJECT REPORT (DPR) FOR SH-103 (MANGHWE- GOVINDPUR)

Consultant: HOLTEC CONSULTING PRIVATE LIMITED

Designed	Checked	Approved
GBK	SM	JIG
Drawn: GBK	Scale: NTS	Date: APRIL - 2014

Title : SIGNAGE PLAN SH-103 (MANGHWE - GOVINDPUR) (AT CH.- 15+000 TO 16+000)

Drawing No. HOL/BSRDCL/DPR/13510/SP | Rev. 0 | Sheet 16

CAD File Ref : | A3

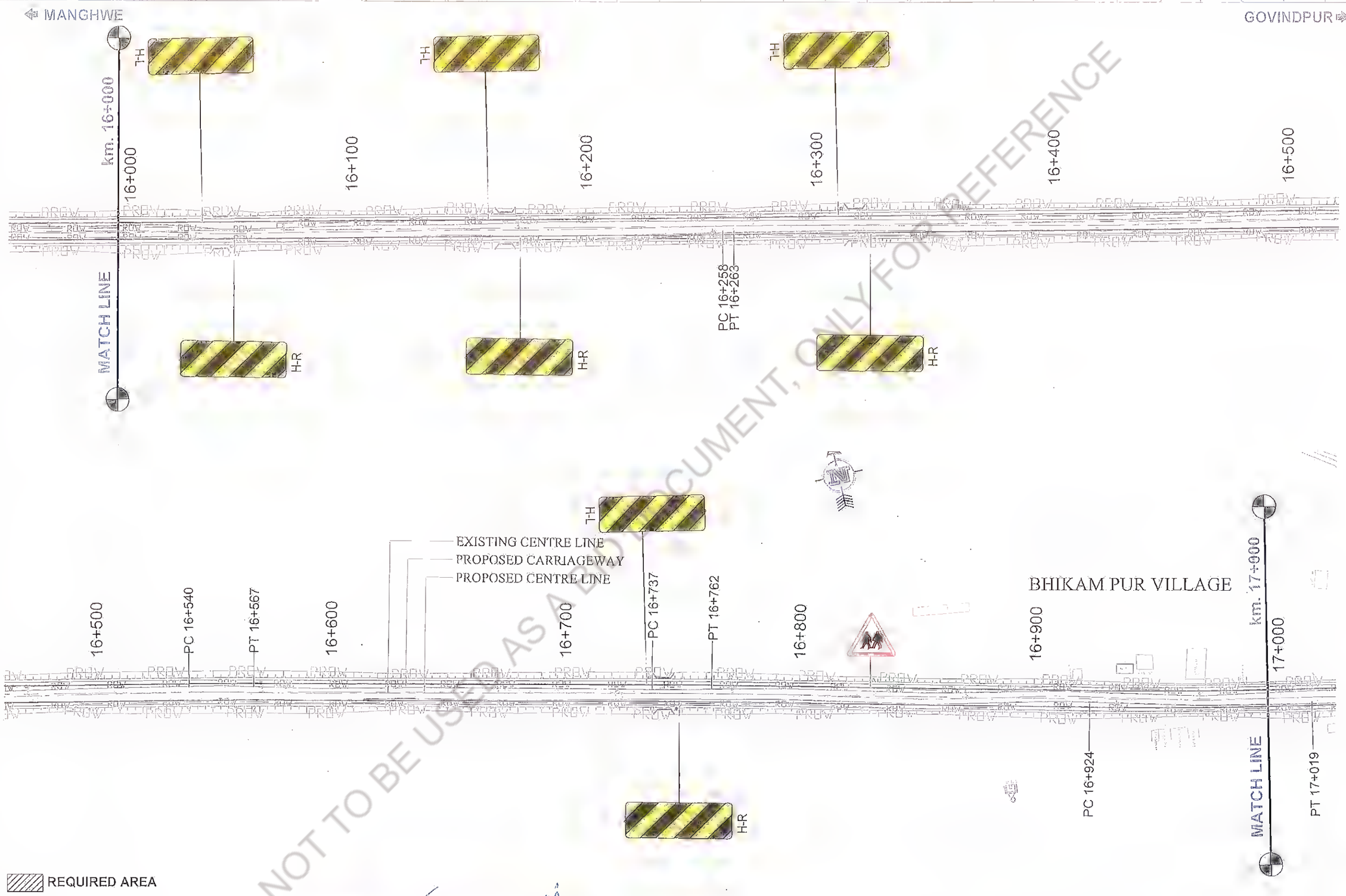

Revision					
Rev.	Date:	Description	Drawn	Checked	Approved

Client: Bihar State Road Development Corporation Limited, PIU, Nawada

Project Title : CONSULTANCY SERVICES FOR PREPARATION OF DETAILED PROJECT REPORT (DPR) FOR SH-103 (MANGHWE- GOVINDPUR)

Consultant: HOLTEC CONSULTING PRIVATE LIMITED

Designed	Checked	Approved
GBK	SM	JIG
Drawn	Scale	Date
GBK	NTS	APRIL - 2014

Title : SIGNAGE PLAN SH-103 (MANGHWE - GOVINDPUR) (AT CH.- 16+000 TO 17+000)

Drawing No.	Rev.	Sheet
HOL/BSRDCL/DPR/13510/SP	0	17

CAD File Ref : A3

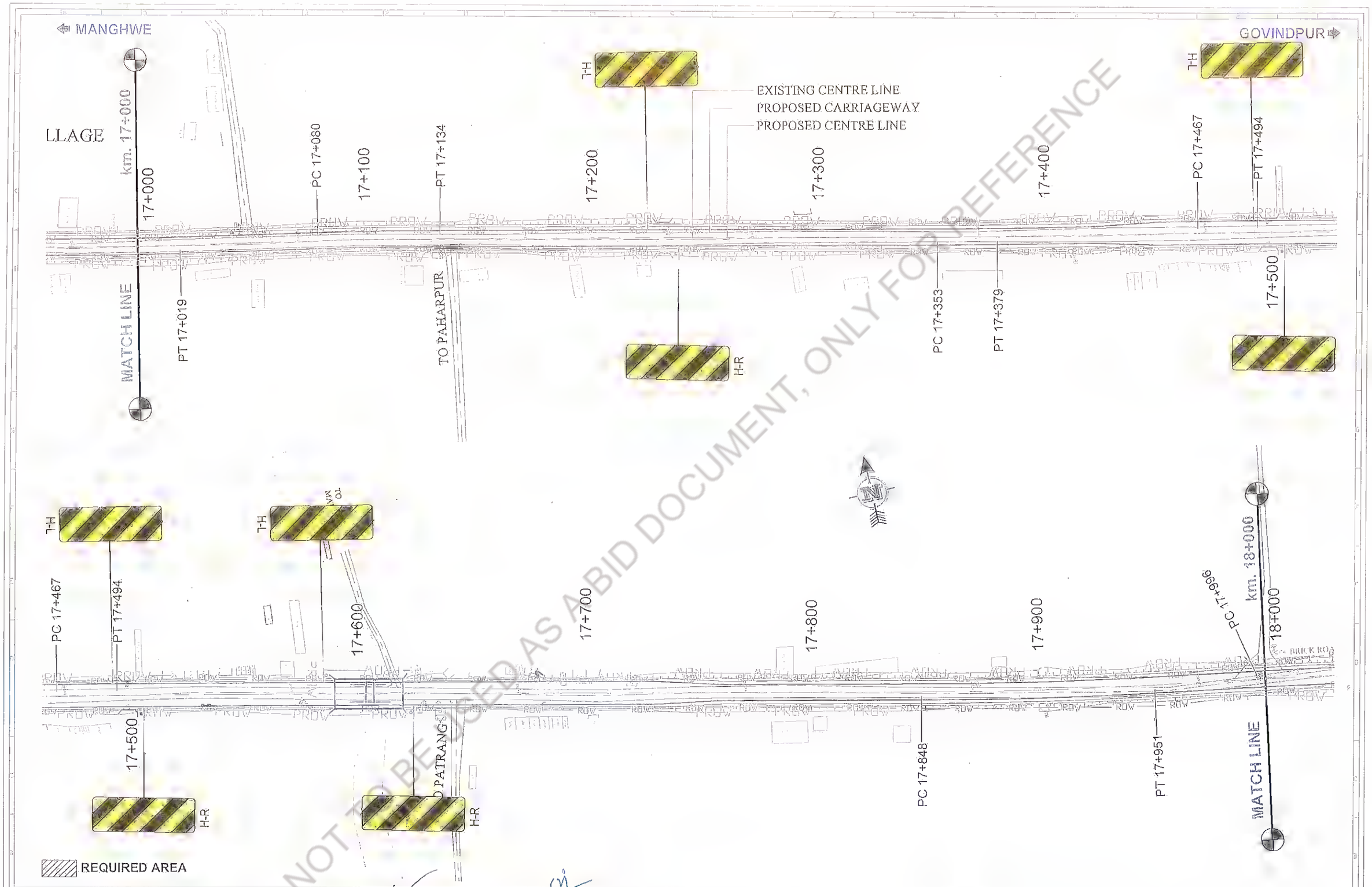

Revision					
Rev.	Date	Description	Drawn	Checked	Approved

Client: Bihar State Road Development Corporation Ltd. Patna

Project Title : CONSULTANCY SERVICES FOR PREPARATION OF DETAILED PROJECT REPORT (DPR) FOR SH-103 (MANGHWE- GOVINDPUR)

Consultant: HOLTEC CONSULTING PRIVATE LIMITED

Designed	Checked	Approved
GBK	SM	JIS
Drawn: GBK	Scale: NTS	Date: APRIL - 2014

Title : SIGNAGE PLAN SH-103 (MANGHWE - GOVINDPUR) (AT CH.- 17+000 TO 18+000)

Drawing No. HOL/BSRDCL/DPR/13510/SP | Rev. 0 | Sheet 18 | A3

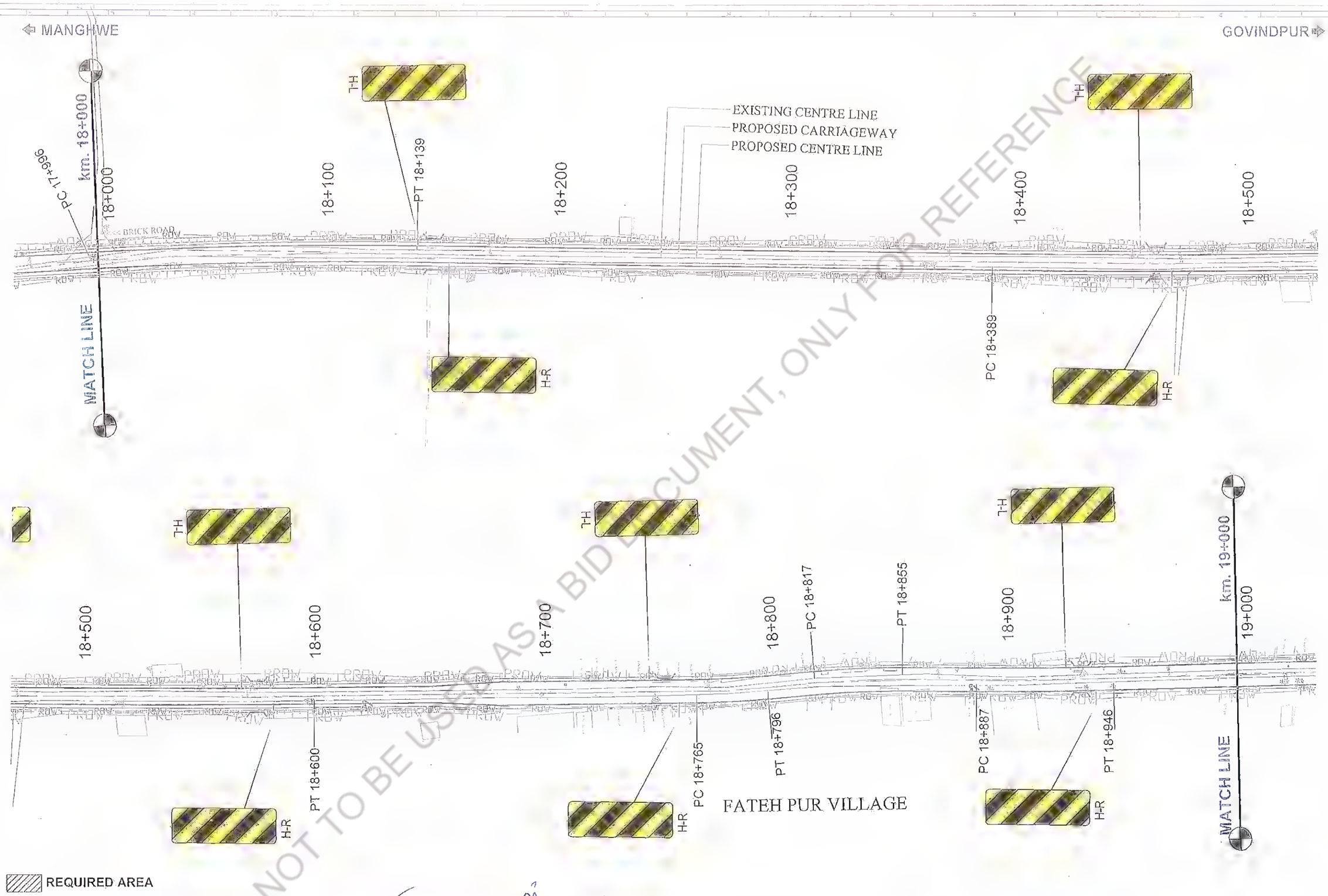

Revision					
Rev.	Date	Description	Drawn	Checked	Approved

Client: Bihar State Road Development Corporation Ltd. PIU, Nawada

Project Title : CONSULTANCY SERVICES FOR PREPARATION OF DETAILED PROJECT REPORT (DPR) FOR SH-103 (MANGHWE- GOVINDPUR)

Consultant: HOLTEC CONSULTING PRIVATE LIMITED

Designed	Checked	Approved
GBK	SM	JIG
Drawn: GBK	Scale: NTS	Date: APRIL - 2014

Title : SIGNAGE PLAN SH-103 (MANGHWE - GOVINDPUR) (AT CH.- 18+000 TO 19+000)

Drawing No. HOL/BSRDCL/DPR/13510/SP | Rev. 0 | Sheet 19

CAD File Ref : | A3

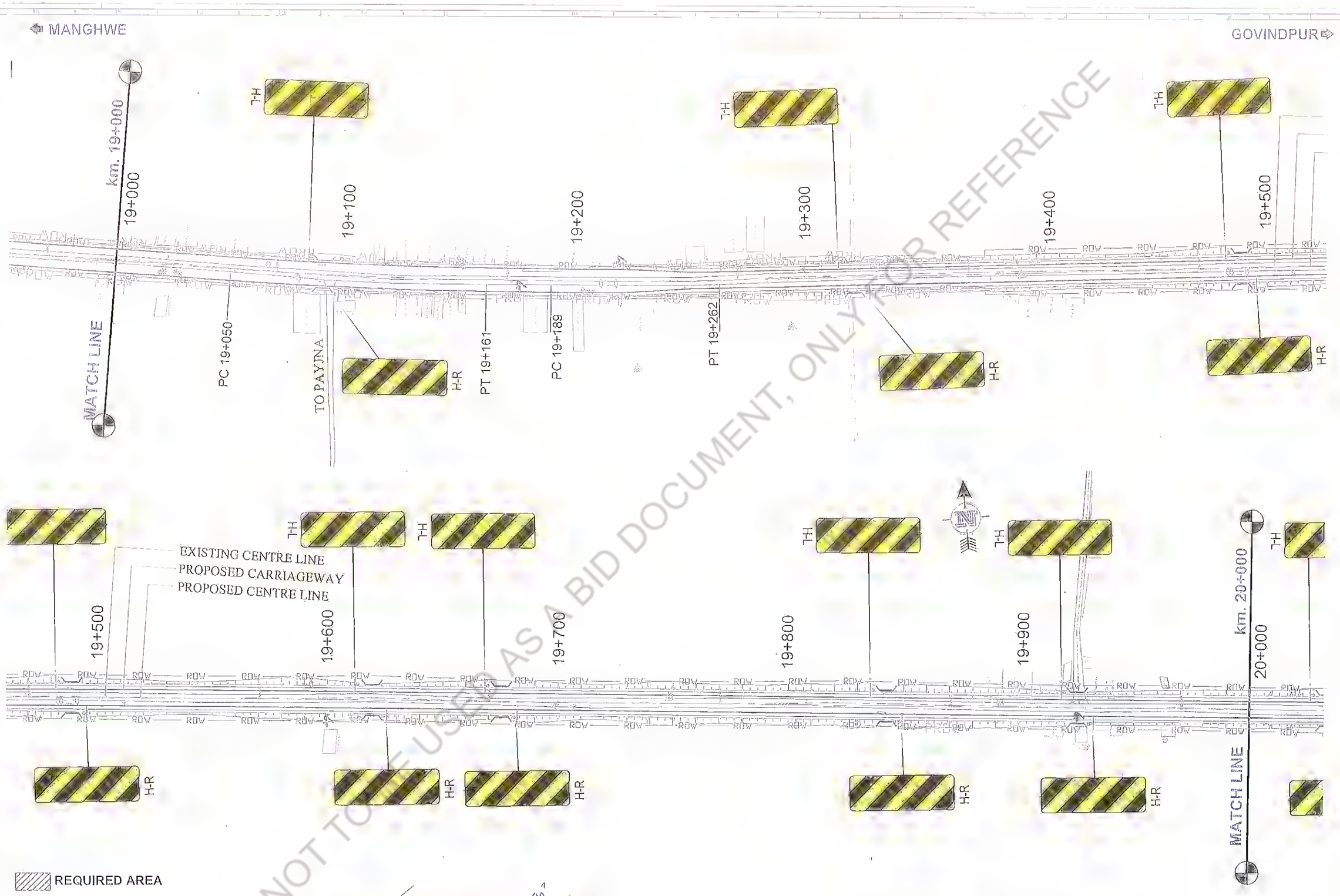

Revision					
Rev.	Date	Description	Drawn	Checked	Approved

Client: Bihar State Road Development Corporation Ltd. PIU, Nawada

DGM (Tech) Bihar State Road Development Corporation Ltd. Nawada

Project Title : CONSULTANCY SERVICES FOR PREPARATION OF DETAILED PROJECT REPORT (DPR) FOR SH-103 (MANGHWE- GOVINDPUR)

Consultant: HOLTEC CONSULTING PRIVATE LIMITED

Designed	Checked	Approved
GBK	SM	JIG
Drawn	Scale	Date
GBK	NTS	APRIL - 2014

Title : SIGNAGE PLAN SH-103 (MANGHWE - GOVINDPUR) (AT CH.- 19+000 TO 20+000)

Drawing No. HOL/BSRDCL/DPR/13510/SP | Rev. 0 | Sheet 20

CAD File Ref : | A3

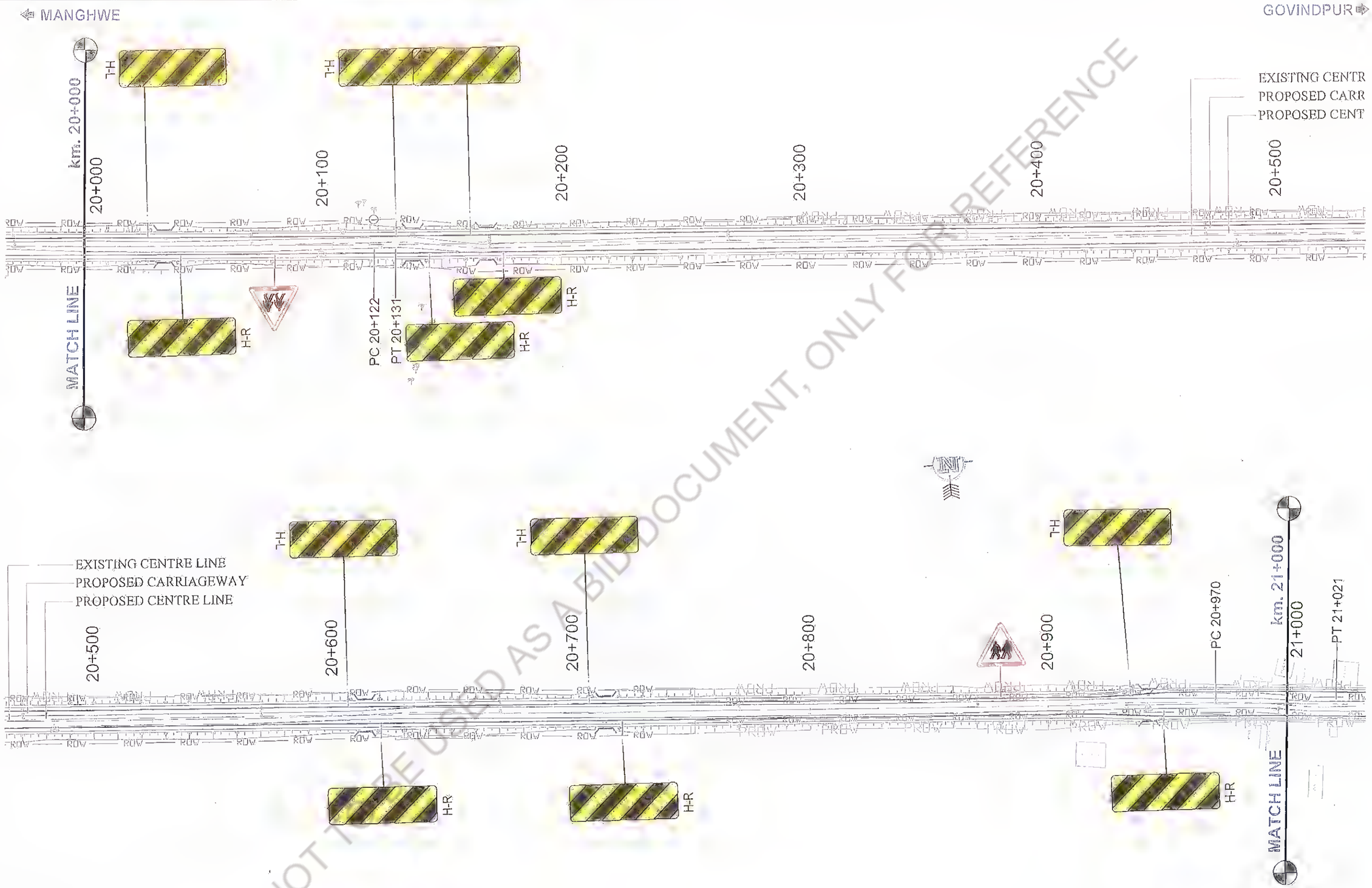

Revision					
Rev.	Date	Description	Drawn	Checked	Approved

Client: Bihar State Road Development Corporation Ltd. PIU, Nawada

Project Title : CONSULTANCY SERVICES FOR PREPARATION OF DETAILED PROJECT REPORT (DPR) FOR SH-103 (MANGHWE- GOVINDPUR)

Consultant: HOLTEC CONSULTING PRIVATE LIMITED

Designed	Checked	Approved
GBK	SM	JIG
Drawn	Scale	Date
GBK	NTS	APRIL - 2014

Title : SIGNAGE PLAN SH-103 (MANGHWE - GOVINDPUR) (AT CH.- 20+000 TO 21+000)

Drawing No. HOL/BSRDCL/DPR/13510/SP | Rev. 0 | Sheet 21 | A3

CAD File Ref :

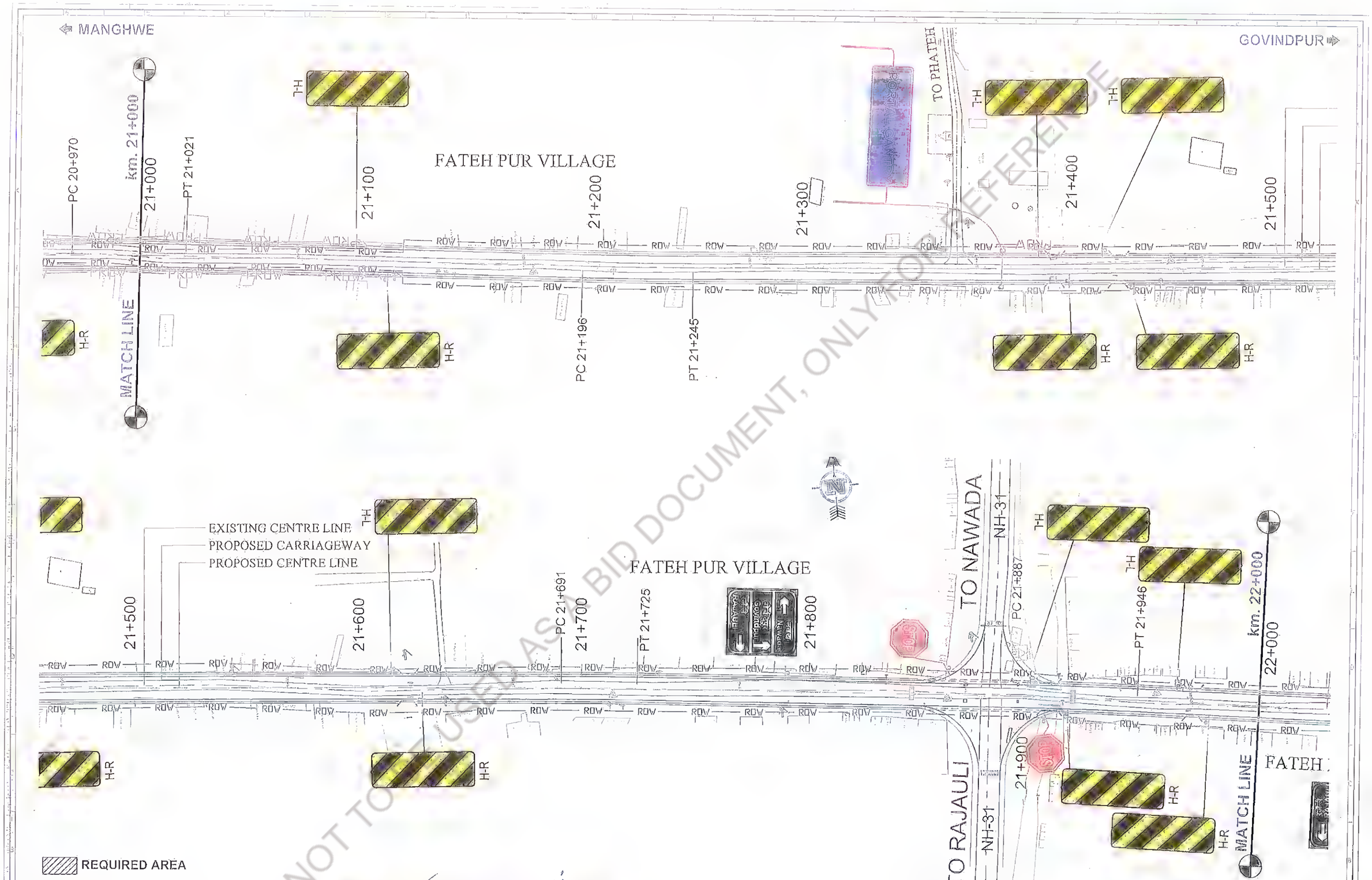

Revision					
Rev.	Date:	Description	Drawn	Checked	Approved

Client:

Bihar State Road Development Corporation Ltd.
MANAGER (TECH) Bihar State Road Devp. Corp. Ltd.
DGM (Tech) Bihar State Road Devp. Corp. Ltd. Nawada

Project Title : CONSULTANCY SERVICES FOR PREPARATION OF DETAILED PROJECT REPORT (DPR) FOR SH-103 (MANGHWE- GOVINDPUR)

Consultant: HOLTEC CONSULTING PRIVATE LIMITED

Designed	Checked	Approved
GBK	SM	JIG
Drawn	Scale	Date
GBK	NTS	APRIL - 2014

Title : SIGNAGE PLAN SH-103 (MANGHWE - GOVINDPUR) (AT CH.- 21+000 TO 22+000)

Drawing No. HOL/BSRDCL/DPR/13510/SP | Rev. 0 | Sheet 22

CAD File Ref : | A3

DRAINAGE PLAN

Design of Longitudinal Drain

Design of longitudianl pipe drain has been carried in accordance with IRC:SP:42-2014
Design Return Period adopted - 10 years (As per section 7.1.4 of SP:42)

1. Hydrologic Design:

Q = 0.028 P f Ac Ic

Where,
Q= Maximum runoff (cum/sec)
P= Coeff. of runoff for the catchment characteristics
Ac= Area of catchment in hectares
Ic= Critical intensity of rainfall in cm/hr.
f = Spread Factor (1.0)

Coeff. of runoff (P):

Pavement Surface	:	0.9	Tabl 6.5, IRC SP-42
Footpath	:	0.8	
Median (Covered)	:	0.8	
Adjacent Land	:	0.4	
Pav	:	0.52	2.5

Catchment Area (Ac):

Bituminous Surface, Width	:	3.50
Footpath + Separator, Width	:	2.00
Median, Width	:	0.00
Adjacent Land, Width	:	15.0

Critical rainfall intensity (Ic):

Ic = F/T*((T + 1) / (Tc + 1))

Where,
Ic = Intensity of rainfall within time of concentration, 'Tc' hrs.
F = Total rainfall in cm falling in duration of storm of 'T' hours.
Tc = Time of Concentration in hrs. within a storm duration of "T" hours
T = Duration of total rainfall (F) in hours

From iso-pluvial map for the sub-zone 3(c) in which road lies , 24 hour rainfall of 50 year return period is (in mm)	304
As per Table 6.2 IRC SP42, corresponding 1 hour rainfall is 39 percent of 24 hour rainfall (in mm)	118.56

MANAGER (TECH)
Bihar State Road Devp. Corp. Ltd.

DGM (Tech)
Bihar State Road Devp. Corp. Ltd.
PIU, Nawada

Design of Longitudinal Drain

Duration of total rainfall, T	:	1.00	hr	
F for 50 year return period	:	11.86	cm/hr	Annex V, IRC SP-42
F for 25 year return period	:	10.20	cm/hr	
F for 10 year return period	:	7.94	cm/hr	
F for 2 year return period	:	4.62	cm/hr	

Time of Concenration (Tc):

The time of concentration is the sum of the (i) overland flow time (entry time) and (ii) Channel flow time

$Tc = To + Tf$

$To = 0.092 * [(nL)^{0.8}/(P_2^{0.5} * S^{0.4})]$ min

$Tf = L/(v \times 60)$

Where,
- Tc = Time of Concentration in minutes.
- n = Manning's roughness co-efficient (0.011)
- L = Flow Length
- P_2 = 2-year, 24 hour rainfall in mm (118.56)
- S = Slope of Catchment area
- w = Width of catchment area in 'm'
- v = average velocity of water in the drain in 'm/sec' (1.50)

Hydraulic Design:

Discharge $q = (1/n) * A * R^{2/3} * S^{1/2}$

Velocity $V = (1/n) * R^{2/3} * S^{1/2}$

Where,
- q = Discharge in 'Cum/Sec'
- V = Mean velocity in ' m/sec'
- n = Manning's Roughness coefficient, (0.013)
- R = Hydraulic Radius in 'm'
- S = Bed slope of drain
- 0 A = Area of the flow cross-section in' m^2'

MANAGER (TECH)
Bihar State Road Devp. Corp. Ltd.
PIU, Nawada

DGM (Tech)
Bihar State Road Devp. Corp. Ltd.
PIU, Nawada

Design of Longitudinal Drain

Checks:

1) $q > Q$
2) Maximum V : 6 m/sec
3) $dn > dc$

dc : $\{q^2/(b^2*g)\}^{(1/3)}$

Where,
dn = Normal depth of flow in 'm'
dc = Critical depth of flow in 'm'
q = Discharge in 'Cum/Sec'
b = Width of Drain
g = acceleration due to gravity, 9.81 m^2/s

MANAGER (TECH)
Bihar State Road Devp. Corp. Ltd.
PIU, Nawada

DGM (Tech)
Bihar State Road Devp. Corp. Ltd.
PIU, Nawada

Design of Line Drain Package -1

Chainage				FRL		Invert Level			Hydrologic Calculations				Hydraulic Calculations								Checks :		
From	To	Length (m)	Direction of Flow	Ch1	Ch2	Ch1	Ch2	Drain bed Slope	Time of Concntn. in Minutes (tc):	Critical rainfall intensity in cm (Ic):	Catchment area in Hectares (Ac)	Discharge (Q) in m^3/sec	Drain bed Width in m (b)	Flow Depth req. m (dn)	Welted Perimeter	Flow Depth provided in m	Hydraulic Radius in m (R)	Mean Velocity in m/s (V)	Discharge (q) in m^3/sec	Critical Depth (dc)	Capacity (q>Q)	Depth of flow (dc<dn)	Velocity (Max. 6 m/sec)
Start of RCC Drain																							
Drain Outlet at culvert at 29300																							
		100																					
7150	7250	100	↓	102.080	102.080	101.480	101.230	0.003	1.87	43.15	0.205	0.130	0.50	0.390	2.338	0.650	0.320	1.798	1.344	0.25	OK	OK	OK
Drain Outlet at culvert at 7+250																							
		90																					
7250	7340	90	↑	102.080	102.080	101.230	101.480	0.003	1.76	43.35	0.185	0.117	0.50	0.378	1.631	0.400	0.221	1.480	0.533	0.04	OK	OK	OK
Drain Outlet at culvert at 7+350																							
		80																					
7350	7430	80	↑	102.080	102.326	101.180	101.726	0.007	1.65	43.54	0.164	0.105	0.50	0.365	1.631	0.400	0.221	2.321	0.835	0.09	OK	OK	OK
Drain Outlet at culvert at 7+440																							
		20																					
7440	7460	20	↑	102.378	102.440	101.578	101.760	0.009	0.98	44.70	0.041	0.027	0.50	0.267	1.858	0.480	0.253	2.937	1.382	0.259	OK	OK	OK
		120																					
7470	7560	90	↓	102.451	102.264	101.757	101.453	0.003	2.09	42.77	0.185	0.116	0.50	0.376	2.228	0.611	0.305	2.026	1.375	0.26	OK	OK	OK
7560	7590	30	↓	102.264	102.187	101.453	101.337	0.004	2.09	42.77	0.062	0.154	0.50	0.413	2.338	0.650	0.320	2.238	1.673	0.38	OK	OK	OK
Drain Outlet at culvert at 7+550																							
END of RCC Drain																							
Start of RCC Drain																							
		200																					
Drain Outlet at culvert at 10+125																							
10380	10480	100	↑	103.730	103.991	102.830	103.278	0.004	2.98	41.23	0.205	0.124	0.50	0.384	1.950	0.513	0.266	2.132	1.106	0.17	OK	OK	OK
10480	10580	100	↑	103.991	104.176	103.278	103.376	0.001	2.98	41.23	0.205	0.248	0.50	0.493	2.197	0.600	0.300	1.077	0.711	0.07	OK	OK	OK
END of RCC Drain																							
Start of RCC Drain																							
		90																					
Drain Outlet at culvert at 11+325																							
11430	11520	90	↑	106.106	106.193	105.206	105.443	0.003	1.76	43.35	0.185	0.117	0.50	0.378	2.056	0.550	0.281	1.693	0.978	0.13	OK	OK	OK
Drain Outlet at culvert at 11+520																							
		80																					
11520	11600	80	↑	106.193	106.266	105.443	105.666	0.003	1.65	43.54	0.164	0.105	0.50	0.365	1.631	0.400	0.221	1.483	0.534	0.04	OK	OK	OK
END of RCC Drain																							
Start of RCC Drain																							
		340																					
Drain Outlet at culvert at 12+480																							
12450	12550	100	↑	105.798	106.133	104.998	105.343	0.003	4.53	38.53	0.205	0.255	0.50	0.498	2.167	0.589	0.296	2.010	1.291	0.23	OK	OK	OK
12550	12670	120	↑	106.133	106.489	105.343	105.889	0.005	4.53	38.53	0.246	0.139	0.50	0.399	1.631	0.400	0.221	1.894	0.682	0.06	OK	OK	OK
12680	12780	100	↓	106.495	106.443	105.895	105.731	0.002	4.53	38.53	0.205	0.255	0.50	0.498	1.946	0.511	0.266	1.284	0.663	0.06	OK	OK	OK

MANAGER (TECH)
Bihar State Road Devp. Corp. Ltd.

DGM (Tech)
Bihar State Road Devp. Corp. Ltd.
PIU, Nawada

Design of Line Drain Package -1

Chainage				FRL		Invert Level			Hydrologic Calculations				Hydraulic Calculations								Checks :		
From	To	Length (m)	Direction of Flow	Ch1	Ch2	Ch1	Ch2	Drain bed Slope	Time of Concntn. in Minutes (tc):	Critical rainfall intensity in cm (Ic):	Catchment area in Hectares (Ac)	Discharge (Q) in m^3/sec	Drain bed Width in m (b)	Flow Depth req. m (dn)	Wetted Perimeter	Flow Depth provided in m	Hydraulic Radius in m (R)	Mean Velocity in m/s (V)	Discharge (q) in m^3/sec	Critical Depth (dc)	Capacity (q>Q)	Depth of flow (dc<dn)	Velocity (Max. 6 m/sec)
12780	12800	20	↓	106.443	106.431	105.731	105.697	0.002	4.53	38.53	0.041	0.278	0.50	0.516	2.008	0.533	0.274	1.344	0.740	0.07	OK	OK	OK
Drain Outlet at bridge at 13+000																							
END of RCC Drain																							
Start of Earthen Drain																							
		40																					
17450	17490	40	↓	111.726	111.855	111.220	111.156	0.002	1.20	44.31	0.082	0.053	0.50	0.305	1.911	0.499	0.261	1.260	0.628	0.05	OK	OK	OK
Drain Outlet at Culvert at 17+500																							
		90																					
17500	17590	90	↓	111.840	111.109	111.140	110.379	0.008	1.76	43.35	0.185	0.117	0.50	0.378	1.999	0.530	0.273	2.977	1.625	0.36	OK	OK	OK
Drain Outlet at Bridge at 17+605																							
		120																					
17610	17690	80	↓	111.109	111.871	110.209	111.171	0.012	2.09	42.77	0.164	0.154	0.50	0.413	1.914	0.500	0.261	3.447	1.723	0.40	OK	OK	OK
17690	17730	40	↓	111.871	112.199	111.171	111.599	0.011	2.09	42.77	0.082	0.051	0.50	0.303	1.631	0.400	0.221	2.906	1.046	0.15	OK	OK	OK
END of RCC Drain																							
Start of Earthen Drain																							
		60																					
Drain Outlet at Culvert at 18+490																							
18680	18740	60	↑	111.983	112.098	111.083	111.498	0.007	1.42	43.93	0.123	0.079	0.50	0.337	1.631	0.400	0.221	2.336	0.841	0.10	OK	OK	OK
		90																					
Drain Outlet at Culvert at 18+750																							
18750	18840	90	↑	112.117	112.246	111.217	111.646	0.005	1.76	43.35	0.185	0.117	0.50	0.378	1.631	0.400	0.221	1.939	0.698	0.07	OK	OK	OK
		80																					
18850	18930	80	↓	112.246	112.235	111.618	111.385	0.003	1.65	43.54	0.164	0.105	0.50	0.365	2.338	0.650	0.320	1.942	1.451	0.29	OK	OK	OK
Drain Outlet at culvert at 18+930																							
		340																					
18940	19030	90	↓	112.233	112.220	111.653	111.503	0.002	4.53	38.53	0.185	0.104	0.50	0.364	1.961	0.517	0.268	1.303	0.685	0.06	OK	OK	OK
19030	19130	100	↓	112.220	112.205	111.503	111.336	0.002	4.53	38.53	0.205	0.220	0.50	0.471	2.391	0.669	0.327	1.491	1.164	0.18	OK	OK	OK
19130	19230	100	↓	112.205	112.193	111.336	111.171	0.002	4.53	38.53	0.205	0.336	0.50	0.559	2.824	0.822	0.385	1.652	1.794	0.44	OK	OK	OK
19230	19280	50	↓	112.193	112.218	111.171	111.092	0.002	4.53	38.53	0.103	0.394	0.50	0.599	3.118	0.925	0.423	1.723	2.273	0.60	OK	OK	OK
Start of RCC Drain																							
		150																					
Drain Outlet at culvert at 20+940																							
20940	21040	100	↑	113.104	113.178	112.231	112.468	0.002	2.42	42.19	0.205	0.190	0.50	0.446	1.940	0.509	0.265	1.546	0.794	0.09	OK	OK	OK
21040	21090	50	↑	113.178	113.284	112.468	112.665	0.004	2.42	42.19	0.103	0.063	0.50	0.318	1.683	0.418	0.228	1.803	0.692	0.07	OK	OK	OK
Drain Outlet at culvert at 21+100																							
		320																					
21100	21200	100	↑	113.305	113.519	112.705	112.659	0.002	4.31	38.92	0.205	0.375	0.50	0.586	2.365	0.659	0.323	1.620	1.239	0.21	OK	OK	OK
21200	21300	100	↑	113.519	113.733	112.659	113.029	0.004	4.31	38.92	0.205	0.258	0.50	0.500	1.923	0.503	0.262	1.919	0.968	0.13	OK	OK	OK
21300	21420	120	↑	113.733	113.834	113.029	113.318	0.002	4.31	38.92	0.246	0.141	0.50	0.400	1.393	0.316	0.185	1.224	0.315	0.01	OK	OK	OK

MANAGER (TECH)
Bihar State Road Devp. Corp. Ltd.
PIU, Nawada

DGM (Tech)
Bihar State Road Devp. Corp. Ltd.
PIU, Nawada

Design of Line Drain Package -1

Chainage				FRL		Invert Level			Hydrologic Calculations				Hydraulic Calculations								Checks :		
From	To	Length (m)	Direction of Flow	Ch1	Ch2	Ch1	Ch2	Drain bed Slope	Time of Concntn. in Minutes (tc):	Critical rainfall intensity in cm (Ic):	Catchment area in Hectares (Ac)	Discharge (Q) in m^3/sec	Drain bed Width in m (b)	Flow Depth req. m (dn)	Wetted Perimeter	Flow Depth provided in m	Hydraulic Radius in m (R)	Mean Velocity in m/s (V)	Discharge (q) in m^3/sec	Critical Depth (dc)	Capacity (q>Q)	Depth of flow (dc<dn)	Velocity (Max. 6 m/sec)
Drain Outlet at culvert at 21+425																							
		180																					
21430	21530	100	↑	113.834	113.837	113.334	113.087	0.002	2.76	41.61	0.205	0.225	0.50	0.475	2.056	0.550	0.281	1.640	0.947	0.12	OK	OK	OK
21530	21610	80	↑	113.837	113.840	113.087	113.223	0.002	2.76	41.61	0.164	0.100	0.50	0.360	1.679	0.417	0.228	1.184	0.452	0.03	OK	OK	OK
Drain Outlet at culvert at 21+620																							
		300																					
21620	21730	110	↑	113.840	113.878	113.240	113.068	0.002	4.09	39.30	0.226	0.355	0.50	0.572	2.223	0.609	0.304	1.372	0.927	0.12	OK	OK	OK
21730	21830	100	↑	113.878	113.995	113.068	113.316	0.002	4.09	39.30	0.205	0.225	0.50	0.474	1.853	0.478	0.253	1.530	0.716	0.07	OK	OK	OK
21830	21920	90	↑	113.995	114.100	113.316	113.530	0.002	4.09	39.30	0.185	0.106	0.50	0.367	1.547	0.370	0.208	1.316	0.424	0.02	OK	OK	OK
Drain Outlet at culvert at 21+930																							
		190																					
21930	22030	100	↑	114.112	114.229	113.552	113.385	0.002	2.87	41.42	0.205	0.237	0.50	0.484	2.319	0.643	0.317	1.458	1.072	0.16	OK	OK	OK
22030	22120	90	↑	114.229	114.310	113.385	113.523	0.002	2.87	41.42	0.185	0.112	0.50	0.373	2.158	0.586	0.295	1.334	0.850	0.10	OK	OK	OK
		70																					
22130	22200	70	↓	114.311	114.300	113.531	113.407	0.002	1.53	43.73	0.144	0.092	0.50	0.351	2.460	0.693	0.336	1.564	1.293	0.23	OK	OK	OK
END of RCC Drain																							

MANAGER (TECH)
Bihar State Road Devp. Corp. Ltd.
PIU, Nawada

DGM (Tech)
Bihar State Road Devp. Corp
PIU, Nawada

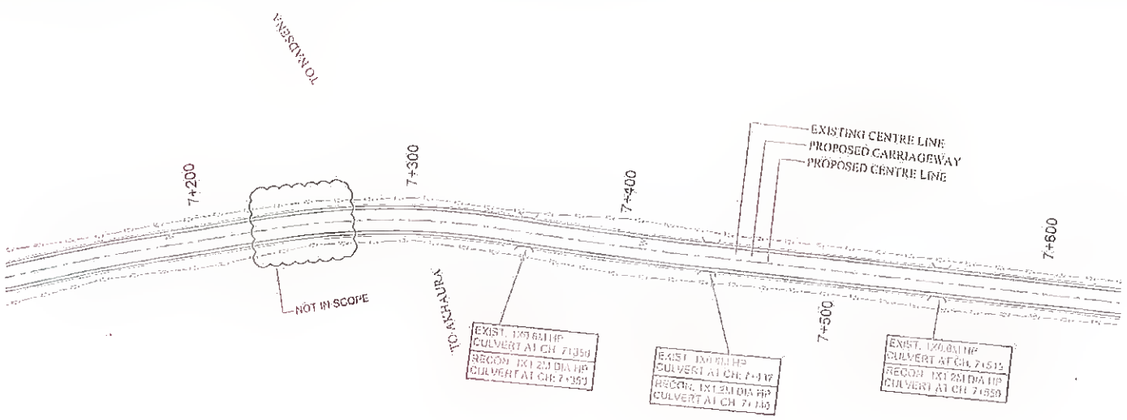

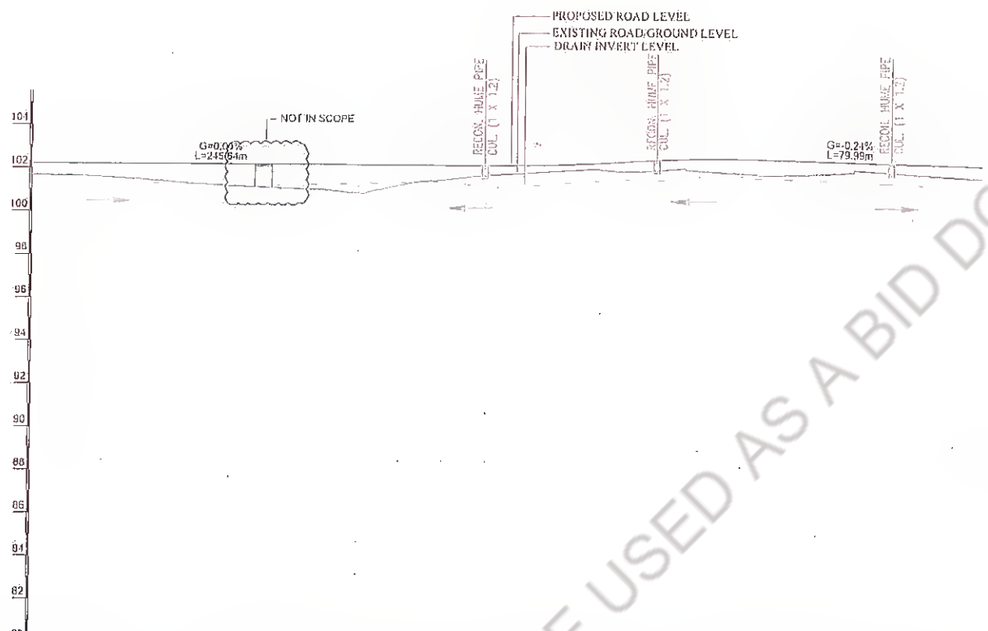

CHAINAGE (METER)	PROPOSED FRL AT PROPOSED CENTRE LINE	EXISTING ROAD/GROUND LEVEL AT PROPOSED CENTRE LINE	DRAIN INVERT LEVEL (M)
7+160	102.227	101.677	101.457
7+180	102.227	101.610	101.411
7+200	102.227	101.498	101.268
7+220	102.227	101.350	101.230
7+240	102.227	101.228	101.275
7+260	102.227	101.152	101.257
7+280	102.227	101.105	101.212
7+300	102.227	100.923	100.982
7+320	102.227	101.314	101.024
7+340	102.227	101.570	101.458
7+360	102.227	101.753	101.517
7+380	102.227	101.899	101.316
7+400	102.314	102.053	101.454
7+420	102.415	102.013	101.630
7+440	102.525	102.045	101.578
7+460	102.587	102.040	101.703
7+480	102.595	101.937	101.741
7+500	102.564	101.872	101.674
7+520	102.507	101.847	101.621
7+540	102.450	102.069	101.527
7+560	102.411	101.945	101.453
7+580	102.362	101.821	101.379

LEGEND

DIRECTION OF WATER FLOW

Revision					
Rev.	Date:	Description	Drawn	Checked	Approved

Client:

Bihar State Road Development Corporation Ltd.
PIU, Nawada

DGM (Tech)
Bihar State Road Devp. Corporation Ltd.
PIU, Nawada

Project Title :

CONSULTANCY SERVICES FOR PREPARATION OF DETAILED PROJECT REPORT (DPR) FOR SH-103 (MANGHWE- GOVINDPUR)

Consultant:

HOLTEC CONSULTING PRIVATE LIMITED

Designed	Checked	Approved
SA	SA	JIG
Drawn	Scale	Date
SVR	NTS	DEC.-2021

Title :

RCC DRAIN PLAN & PROFILE
Km. 7+160 To Km. 7+580

Drawing No. HOL/BSRDCL/DPR/13510/DPP | Rev. R0 | Sheet 01 | A3

CD File Ref :

MANGHWE

GOVINDPUR

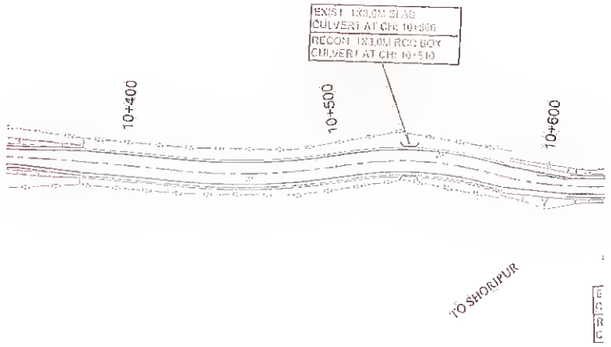

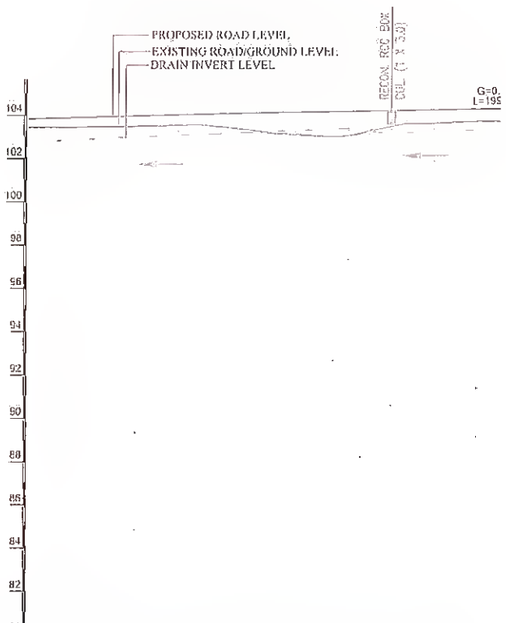

CHAINAGE (METER)	10+380	10+400	10+420	10+440	10+460	10+480	10+500	10+520	10+540	10+560	10+580
PROPOSED FRL AT PROPOSED CENTRE LINE	103.877	103.933	103.989	104.045	104.095	104.138	104.176	104.213	104.250	104.287	104.323
EXISTING ROAD/GROUND LEVEL AT PROPOSED CENTRE LINE	103.452	103.477	103.503	103.578	103.497	103.287	103.118	103.095	103.533	103.672	103.736
DRAIN INVERT LEVEL(M)	102.930	102.933	103.017	102.710	102.184	103.079	103.054	102.923	102.880	103.000	102.976

LEGEND

DIRECTION OF WATER FLOW

Revision					
Rev.	Date	Description	Drawn	Checked	Approved

Client: Bihar State Road Development Corporation Ltd.

Project Title : CONSULTANCY SERVICES FOR PREPARATION OF DETAILED PROJECT REPORT (DPR) FOR SH-103 (MANGHWE- GOVINDPUR)

Consultant: HOLTEC CONSULTING PRIVATE LIMITED

Designed	Checked	Approved
SA	SA	JIG
Drawn: SVR	Scale: NTS	Date: DEC. - 2021

Title : RCC DRAIN PLAN & PROFILE Km. 10+380 To Km. 10+580

Drawing No. HOL/BSRDCL/DPR/13510/DPP | Rev. R0 | Sheet 02 | A3

CAD File Ref :

MANGHWE

GOVINDPUR

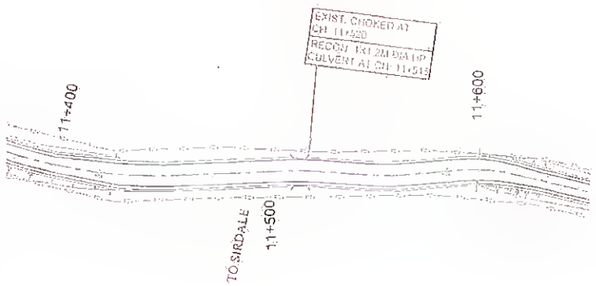

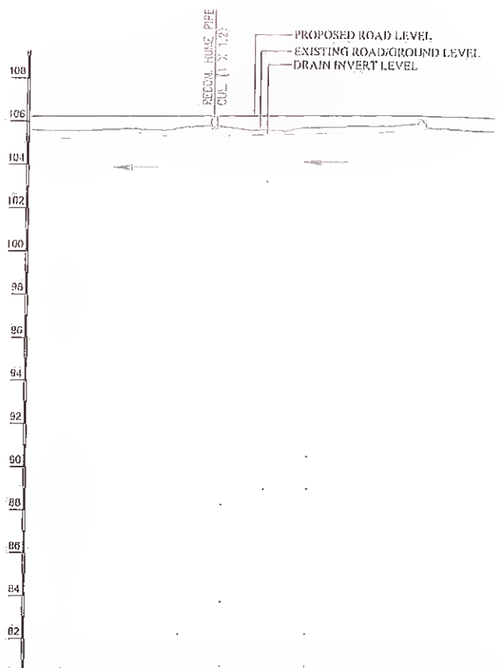

CHAINAGE (METER)	PROPOSED FRL AT PROPOSED CENTRE LINE	EXISTING ROAD/GROUND LEVEL AT PROPOSED CENTRE LINE	DRAIN INVERT LEVEL
11+440	106.262	105.608	102.231
11+460	106.282	105.644	105.265
11+480	106.301	105.697	105.337
11+500	106.320	105.780	105.389
11+520	106.340	105.831	105.413
11+540	106.359	105.704	105.435
11+560	106.379	105.832	105.518
11+580	106.398	105.921	105.601
11+600	106.413	105.958	105.665
11+620	106.398	105.826	105.726
11+640	106.047	105.737	105.747

LEGEND

DIRECTION OF WATER FLOW

Revision					
Rev.	Date	Description	Drawn	Checked	Approved

Client:

Bihar State Road Development Corporation Ltd.
PIU, Nawada

Project Title :

CONSULTANCY SERVICES FOR PREPARATION OF DETAILED PROJECT REPORT (DPR) FOR SH-103 (MANGHWE- GOVINDPUR)

Consultant: HOLTEC CONSULTING PRIVATE LIMITED

Designed	Checked	Approved
SA	SA	JKG
Drawn: SVR	Scale: NTS	Date: DEC. - 2021

Title : RCC DRAIN PLAN & PROFILE Km. 11+440 To Km. 11+600

Drawing No. HOL/BSRDCL/DPR/13510/DPP | Rev. R0 | Sheet 03

CD File Ref :

A3

38

MANGHWE

GOVINDPUR

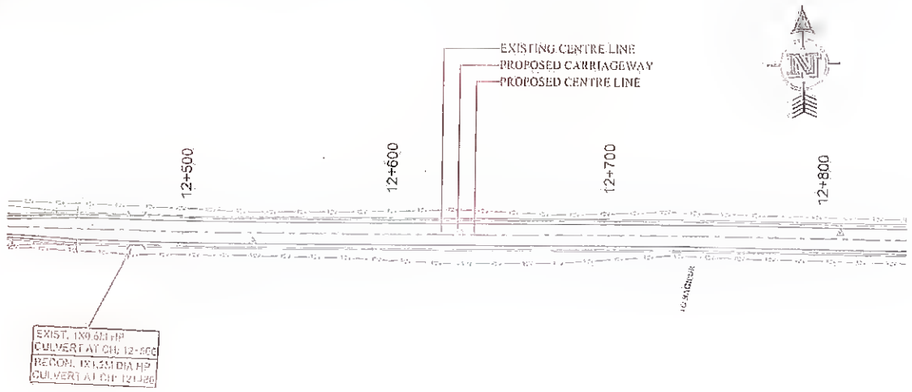

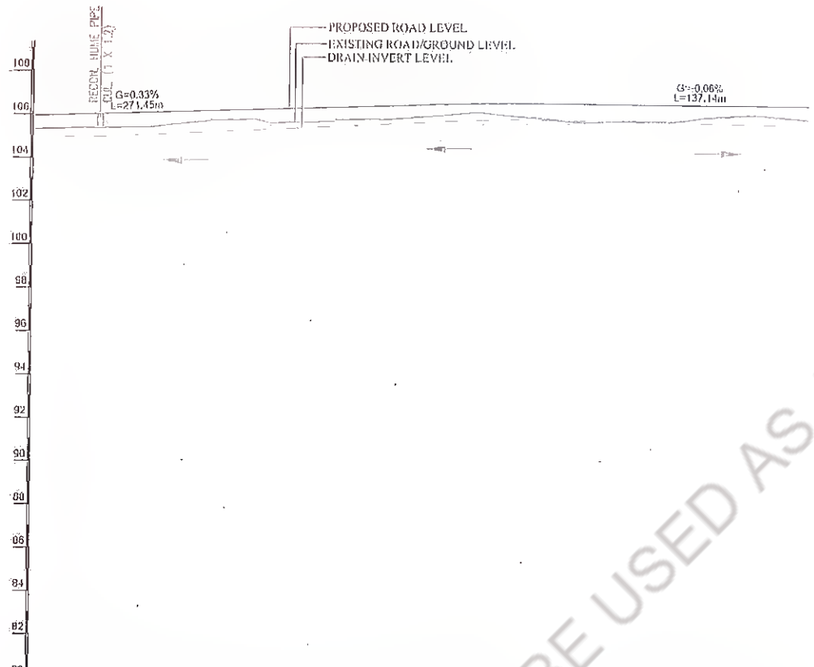

CHAINAGE (METER)	PROPOSED FRL AT PROPOSED CENTRE LINE	EXISTING ROAD/GROUND LEVEL AT PROPOSED CENTRE LINE	DRAIN INVERT LEVEL(M)
12+460	105.978	105.388	104.697
12+480	106.045	105.423	104.998
12+500	106.112	105.450	105.198
12+520	106.179	105.659	105.195
12+540	106.246	105.919	105.293
12+560	106.313	105.697	105.392
12+580	106.380	105.753	105.490
12+600	106.447	105.867	105.589
12+620	106.514	105.913	105.688
12+640	106.579	106.064	105.788
12+660	106.624	106.201	105.881
12+680	106.642	106.016	105.885
12+700	106.636	105.885	105.886
12+720	106.624	105.825	105.882
12+740	106.613	105.839	105.799
12+760	106.601	105.880	105.795
12+780	106.590	106.134	105.791
12+800	106.578	106.043	105.697

LEGEND

DIRECTION OF WATER FLOW

Revision

Rev.	Date:	Description	Drawn	Checked	Approved

Client: Bihar State Road Development Corporation Ltd. PIU, Nawada

DGM (Tech) Devp. Of Bihar State Road Dev. Corp. Ltd. Nawada

Project Title : CONSULTANCY SERVICES FOR PREPARATION OF DETAILED PROJECT REPORT (DPR) FOR SH-103 (MANGHWE- GOVINDPUR)

Consultant: HOLTEC CONSULTING PRIVATE LIMITED

Designed	Checked	Approved
SA	SA	JIG
Drawn	Scale	Date
SVR	NTS	DEC. - 2021

Title : RCC DRAIN PLAN & PROFILE Km. 12+460 To Km. 12+800

Drawing No. HOL/BSRDCL/DPR/13510/DPP | Rev. R0 | Sheet 04

CAD File Ref : | A3

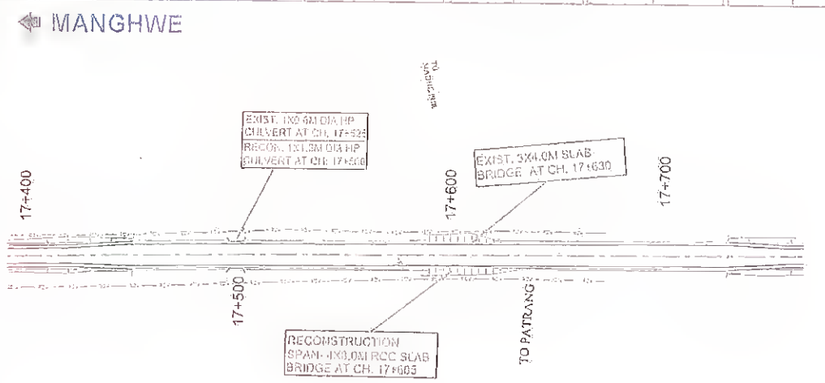

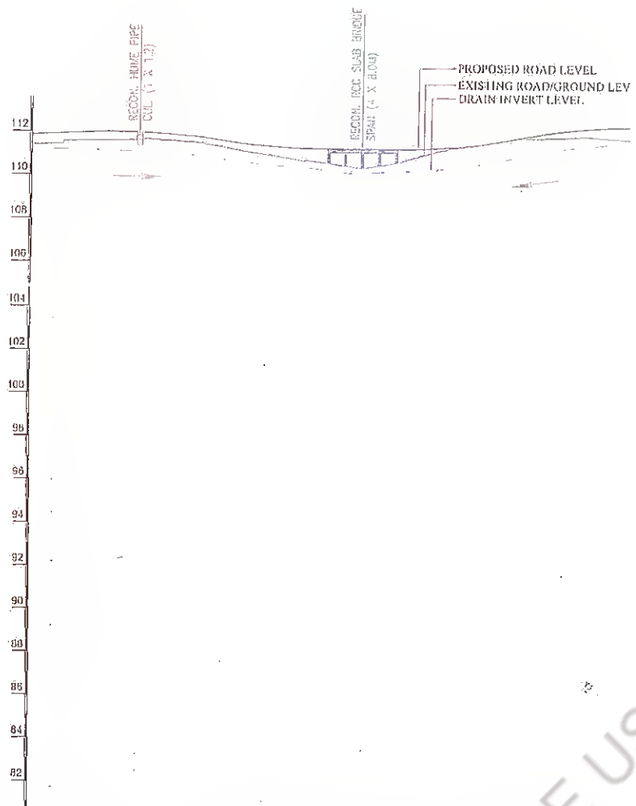

CHAINAGE (METER)	PROPOSED FRL AT PROPOSED CENTRE LINE	EXISTING ROAD/GROUND LEVEL AT PROPOSED CENTRE LINE	DRAIN INVERT LEVEL(M)
17+460	111.911	111.451	111.204
17+480	111.987	111.599	111.172
17+500	111.997	111.625	111.140
17+520	111.961	111.578	111.027
17+540	111.611	111.308	110.756
17+560	111.376	110.979	110.511
17+580	111.267	110.718	110.285
17+600	111.256	110.433	111.109
17+620	111.256	110.604	110.294
17+640	111.306	111.166	110.534
17+660	111.504	111.500	110.652
17+680	111.946	111.784	110.672
17+700	112.156	111.863	111.439
17+720	112.326	111.941	111.549

LEGEND

DIRECTION OF WATER FLOW

Revision					
Rev.	Date	Description	Drawn	Checked	Approved

Client:

Bihar State Road Development Corporation Ltd
PIU, Nawada

DGM (Tech)
Bihar State Road Development Corporation Ltd
PIU, Nawada

Project Title :
CONSULTANCY SERVICES FOR PREPARATION OF DETAILED PROJECT REPORT (DPR) FOR SH-103 (MANGHWE- GOVINDPUR)

Consultant: HOLTEC CONSULTING PRIVATE LIMITED

Designed	Checked	Approved
SA	SA	JIG
Drawn: SVR	Scale: 1/75	Date: DEC. - 2021

Title : RCC DRAIN PLAN & PROFILE Km. 17+460 To Km. 17+720

Drawing No. HOL/BSRDCL/DPR/13510/DPP | Rev. R0 | Sheet 05 | A3

CAD File Ref :

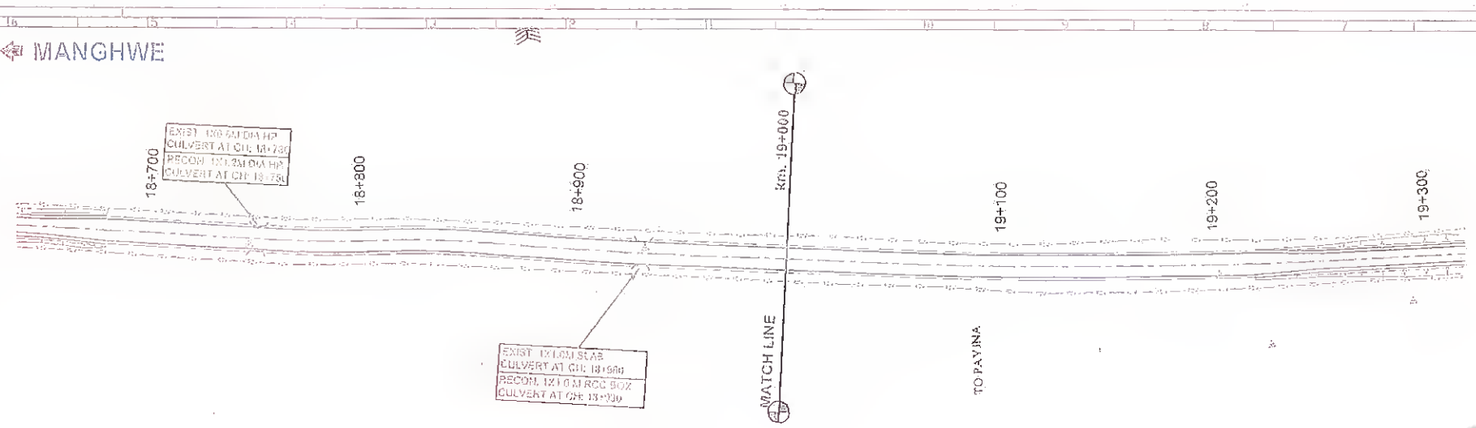

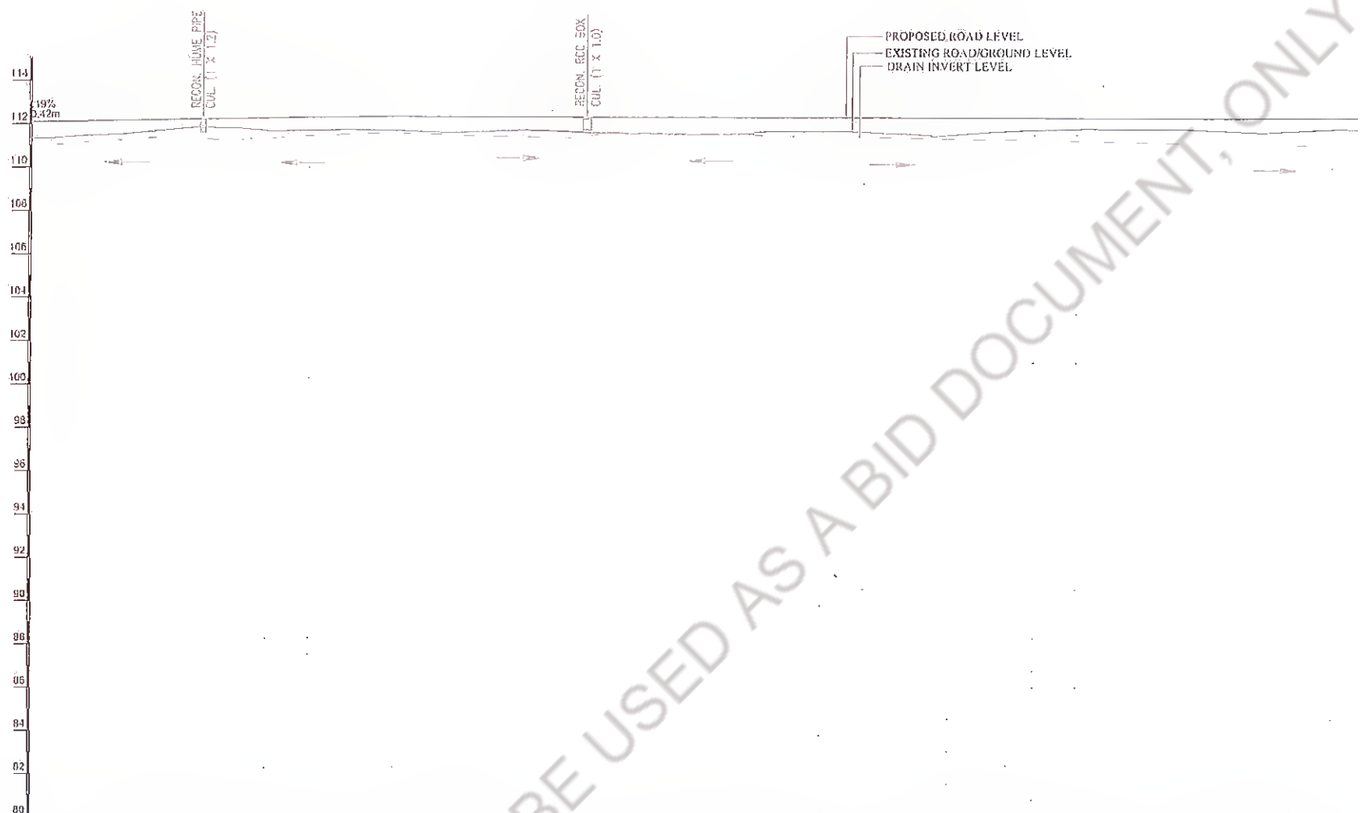

CHAINAGE (METER)	PROPOSED FRL AT PROPOSED CENTRE LINE	EXISTING ROAD/GROUND LEVEL AT PROPOSED CENTRE LINE	DRAIN INVERT LEVEL(M)
18+680	112.130	111.378	111.080
18+700	112.168	111.418	111.221
18+720	112.206	111.645	111.380
18+740	112.245	111.825	111.469
18+760	112.283	111.859	111.273
18+780	112.321	111.794	111.365
18+800	112.358	111.756	111.458
18+820	112.382	111.798	111.507
18+840	112.393	111.754	111.554
18+860	112.392	111.686	111.569
18+880	112.389	111.714	111.550
18+900	112.386	111.775	111.472
18+920	112.383	111.719	111.410
18+940	112.380	111.682	111.653
18+960	112.377	111.629	111.619
18+980	112.374	111.600	111.588
19+000	112.371	111.612	111.552
19+020	112.368	111.740	111.518
19+040	112.365	111.729	111.498
19+060	112.362	111.697	111.452
19+080	112.359	111.619	111.410
19+100	112.356	111.559	111.368
19+120	112.353	111.768	111.352
19+140	112.350	111.791	111.319
19+160	112.347	111.810	111.295
19+180	112.344	111.830	111.252
19+200	112.341	111.840	111.215
19+220	112.339	111.865	111.187
19+240	112.342	111.726	111.155
19+260	112.351	111.756	111.124
19+280	112.365	111.847	111.062

LEGEND

DIRECTION OF WATER FLOW

Revision

Rev.	Date:	Description	Drawn	Checked	Approved

Client: Bihar State Road Development Corporation Ltd. Nawada

Project Title : CONSULTANCY SERVICES FOR PREPARATION OF DETAILED PROJECT REPORT (DPR) FOR SH-103 (MANGHWE- GOVINDPUR)

Consultant: HOLTEC CONSULTING PRIVATE LIMITED

Designed	Checked	Approved
SA	SA	JIG
Drawn	Scale	Date
SVH	NTS	DEC. - 2021

Title : RCC DRAIN PLAN & PROFILE Km. 18+680 To Km. 19+280

Drawing No. HOL/BSHDCL/DPR/13510/DPP | Rev. R0 | Sheet 06

DD File Ref : | A3

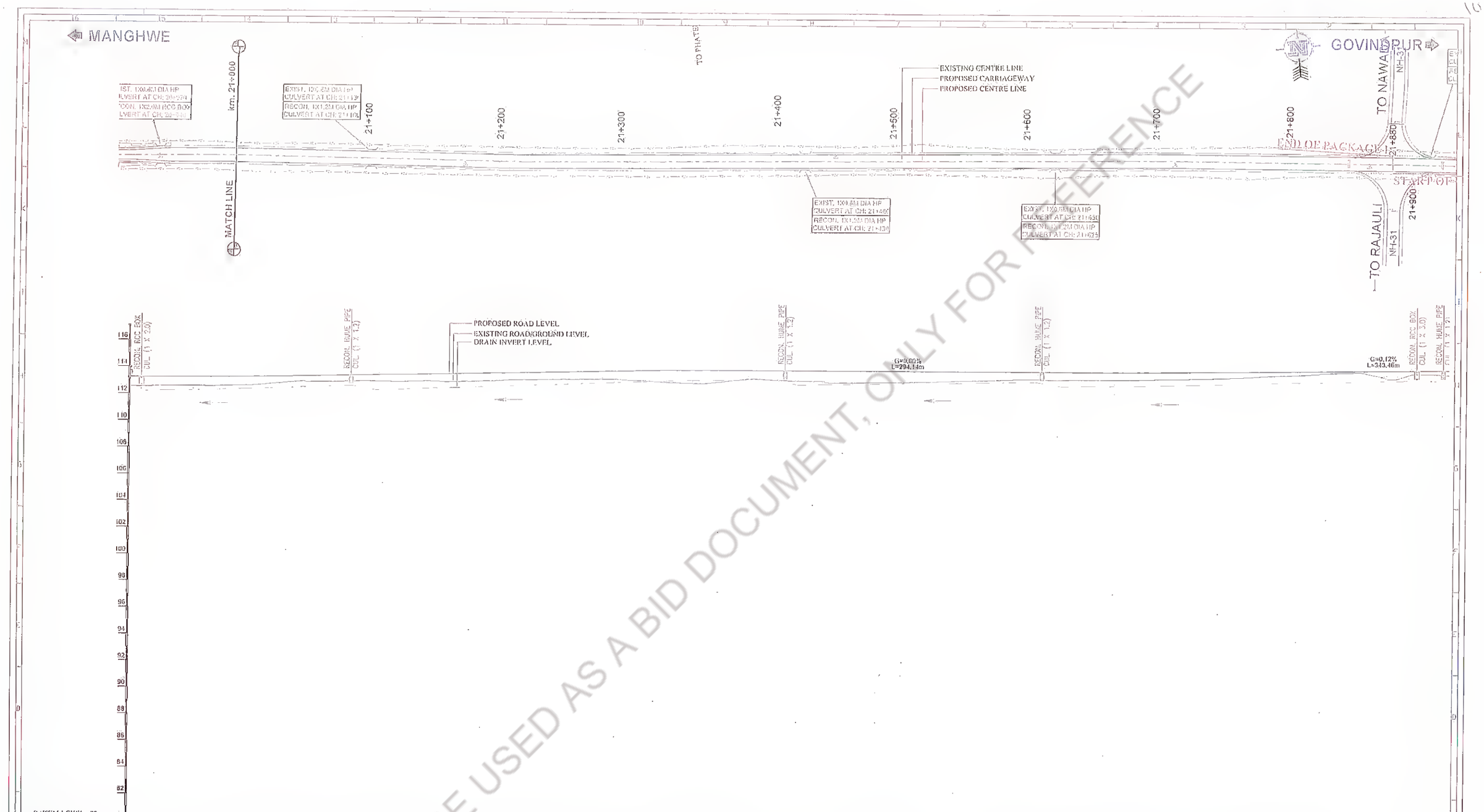

CHAINAGE (METER)	PROPOSED FRL AT PROPOSED CENTRE LINE	EXISTING ROAD/GROUND LEVEL AT PROPOSED CENTRE LINE	DRAIN INVERT LEVEL(M)
20+940	113.251	112.550	112.231
20+960	113.259	112.557	112.237
20+980	113.266	112.566	112.300
21+000	113.275	112.602	112.346
21+020	113.284	112.671	112.401
21+040	113.325	112.816	112.459
21+060	113.367	112.959	112.547
21+080	113.409	112.956	112.625
21+100	113.452	113.034	112.705
21+120	113.495	113.016	112.763
21+140	113.538	113.003	112.737
21+160	113.581	113.051	112.812
21+180	113.624	113.016	112.885
21+200	113.666	113.030	112.929
21+220	113.708	113.122	113.135
21+240	113.752	113.212	112.998
21+260	113.794	113.238	112.881
21+280	113.837	113.264	112.955
21+300	113.880	113.275	113.025
21+320	113.923	113.189	113.143
21+340	113.965	112.953	113.167
21+360	113.974	112.998	113.217
21+380	113.979	113.110	113.282
21+400	113.930	113.330	113.286
21+420	113.981	113.323	113.345
21+440	113.981	113.215	113.374
21+460	113.982	113.128	113.399
21+480	113.983	113.115	113.402
21+500	113.983	113.136	113.395
21+520	113.984	113.162	113.370
21+540	113.984	113.187	113.103
21+560	113.985	113.270	113.135
21+580	113.986	113.337	113.172
21+600	113.986	113.404	113.205
21+620	113.987	113.427	113.240
21+640	113.988	113.395	113.274
21+660	113.988	113.426	112.809
21+680	113.990	113.428	112.838
21+700	113.998	113.460	113.002
21+720	114.014	113.511	113.044
21+740	114.037	113.545	113.083
21+760	114.060	113.595	113.143
21+780	114.083	113.677	113.192
21+800	114.107	113.783	113.242
21+820	114.130	113.890	113.291
21+840	114.154	114.010	113.341
21+860	114.177	114.073	113.390
21+880	114.200	113.835	113.439
21+900	114.224	113.779	113.487
21+920	114.247	113.973	113.530

Revision					
Rev.	Date	Description	Drawn	Checked	Approved

Client:

Bihar State Road Development Corporation Ltd.
Bihar State Road Devp. Corp. Ltd.
PIU, Nawada

DGM (Tech)
Bihar State Road Devp. Corp. Ltd.
PIU, Nawada

Project Title :

CONSULTANCY SERVICES FOR PREPARATION OF DETAILED PROJECT REPORT (DPR) FOR SH-103 (MANGHWE- GOVINDPUR)

Consultant: HOLTEC CONSULTING PRIVATE LIMITED

Designed	Checked	Approved
SA	SA	JIG
Drawn	Scale	Date
SVH	NTS	DEC. - 2021

Title : RCC DRAIN PLAN & PROFILE Km. 20+240 To Km. 21+920

Drawing No. HOL/BSRDCL/DPR/13510/DPP

Rev. R0

Sheet 07

CAD File Ref :

A3

102

MANGHWE

GOVINDPUR

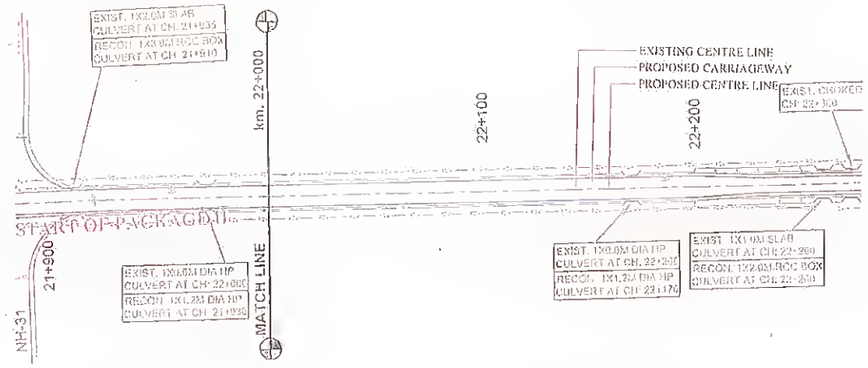

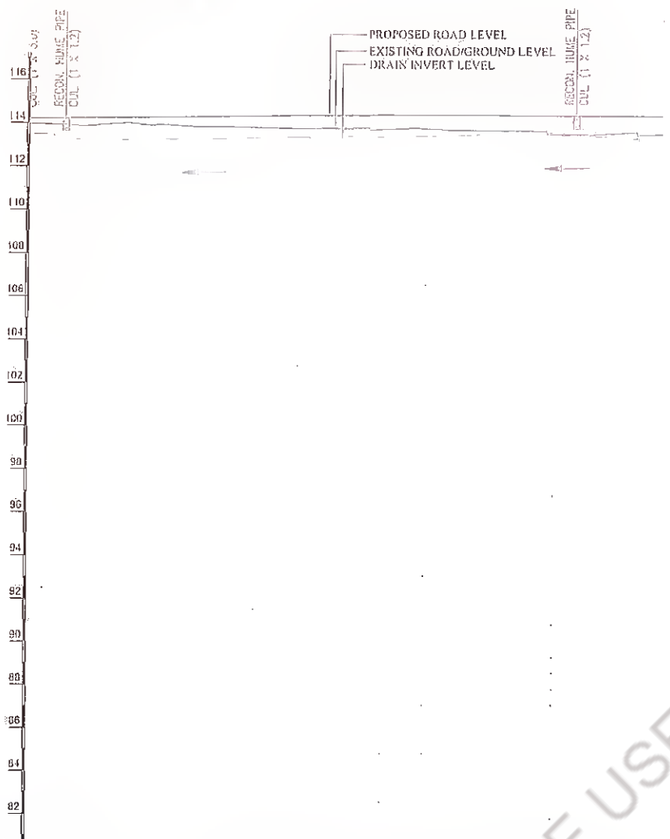

DATUM LEVEL = 80															
PROPOSED FRL AT PROPOSED CENTRE LINE	114.247	114.270	114.294	114.317	114.341	114.364	114.387	114.411	114.434	114.457	114.481	114.504	114.527	114.551	114.574
EXISTING ROAD/GROUND LEVEL AT PROPOSED CENTRE LINE	113.973	113.911	114.023	113.937	113.897	113.854	113.797	113.832	113.794	113.931	113.724	113.825	113.884	113.508	113.561
DRAIN INVERT LEVEL (M)	113.030	113.023	113.059	113.035	113.034	113.077	113.403	113.199	113.475	113.601	113.579	113.759	113.641	113.624	113.607
CHAINAGE (METER)	21+920	21+940	21+960	21+980	22+000	22+020	22+040	22+060	22+080	22+100	22+120	22+140	22+160	22+180	22+200

LEGEND

DIRECTION OF WATER FLOW

Revision					
Rev.	Date:	Description	Drawn	Checked	Approved

Client: Bihar State Road Development Corporation Ltd. PIU, Nawada

Project Title : CONSULTANCY SERVICES FOR PREPARATION OF DETAILED PROJECT REPORT (DPR) FOR SH-103 (MANGHWE- GOVINDPUR)

Consultant: HOLTEC CONSULTING PRIVATE LIMITED

Designed: SA	Checked: SA	Approved: JIG	
Drawn: SVR	Scale: NTS	Date: DEC. - 2021	

Title : RCC DRAIN PLAN & PROFILE Km. 21+920 To Km. 22+200

Drawing No: HOL/BSRDCL/DPR/13510/DPP | Rev. R0 | Sheet 03

DD Ch. Ref : | A3