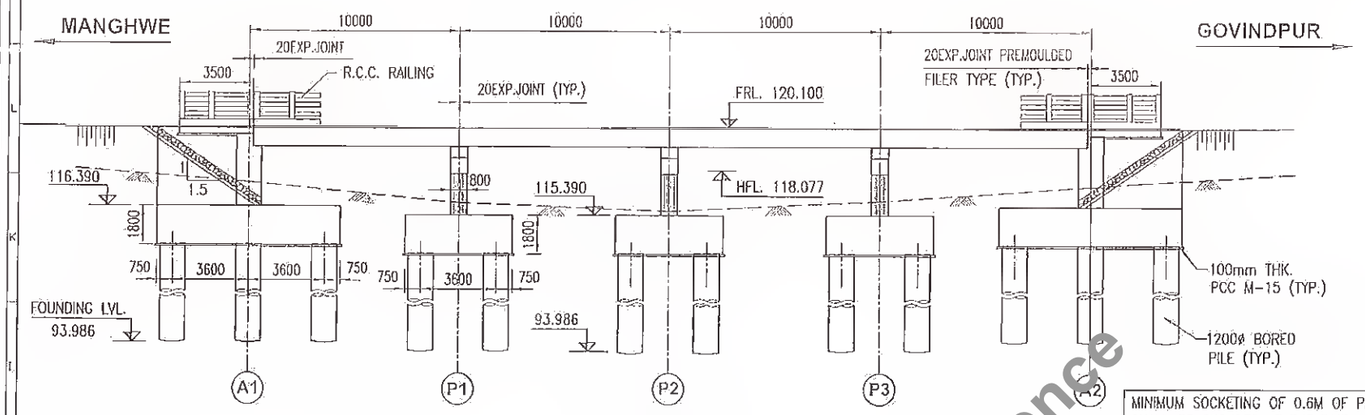

MINIMUM SOCKETING OF 0.6M OF PILE IN ROCK SHALL BE ENSURED AT THE TIME OF EXECUTION.

BED LEVEL	117.505	116.565	116.188	116.655	117.335
DISTANCE (M)	34+100	34+110	34+120	34+130	34+140

CH:- 34+120

SECTIONAL ELEVATION

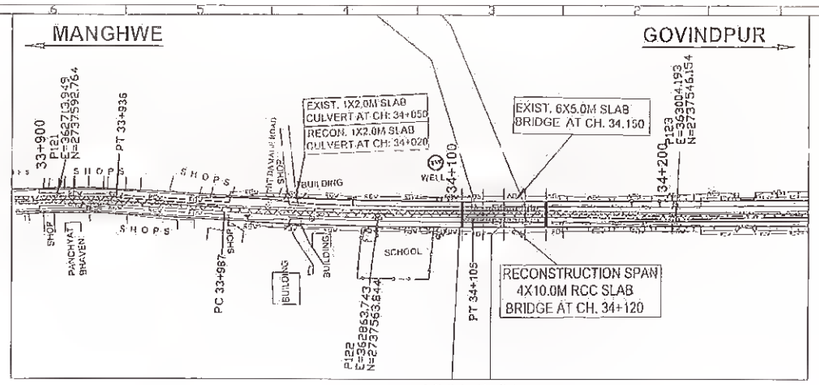

KEY PLAN

SCALE 1:2000

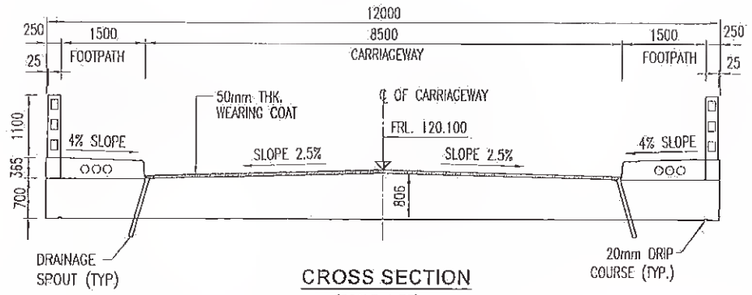

CROSS SECTION

(SCALE 1:75)

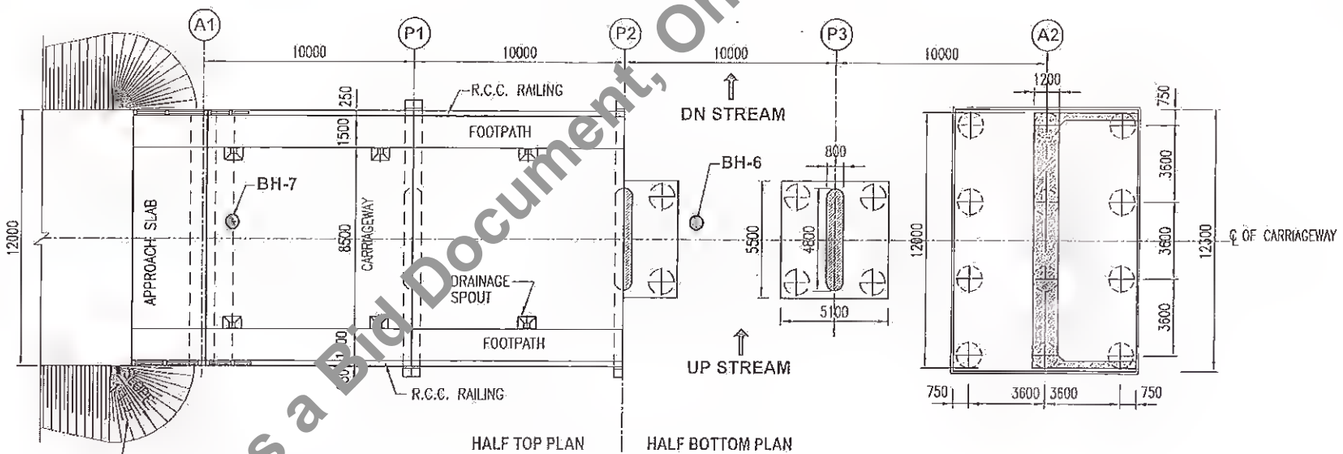

CH:- 34+120

PLAN

(SCALE 1:250)

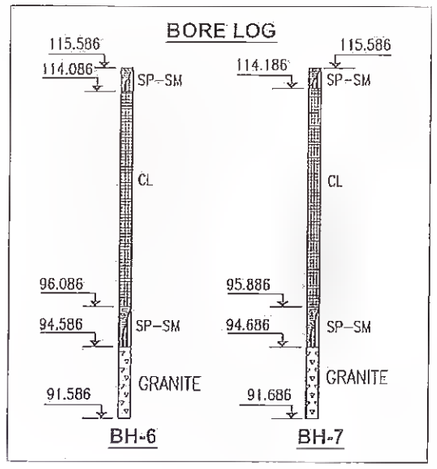

HYDROLOGICAL DATA

CATCHMENT AREA		13.5 Km.^{2}
DISCHARGE		135.4 Cum/Sec.
VELOCITY		2.7 M/Sec.
SCOUR	ABUTMENT	114.776
	PIER	112.911

NOTES:

1. ALL DIMENSIONS ARE IN MILLIMETRES AND LEVELS ARE IN METRES UNLESS OTHERWISE SPECIFIED.
2. DIMENSIONS ARE NOT TO BE SCALED ONLY WRITTEN DIMENSIONS SHALL BE FOLLOWED.

REFERENCE DRAWINGS :

a). GENERAL NOTES.....HOL/BSRDCL/13510/FDDPR/MISC/01.

Revision					
Rev.	Date:	Description	Drawn	Checked	Approved

Client: Bihar State Road Development Corporation Ltd. Patna

Project Title : CONSULTANCY SERVICES FOR PREPARATION OF DETAILED PROJECT REPORT (DPR) FOR SH-103 (MANGHWE- GOVINDPUR)

Consultant: HOLTEC CONSULTING PRIVATE LIMITED

Designed	Checked	Approved
SUD	SUD	RKR
Drawn	Scale	Date
SSH	AS SHOWN	OCT. 2018

Title : GENERAL ARRANGEMENT DRAWING 4X10.0 M SPAN BOX AT CH: KM. 34+120

Drawing No. HOL/BSRDCL/13510/DPR/BR-8/01 | Sheet 1 | Rev. 0

CAD File Ref : HOL/BSRDCL/13510/DPR/BR-8/01 | A3

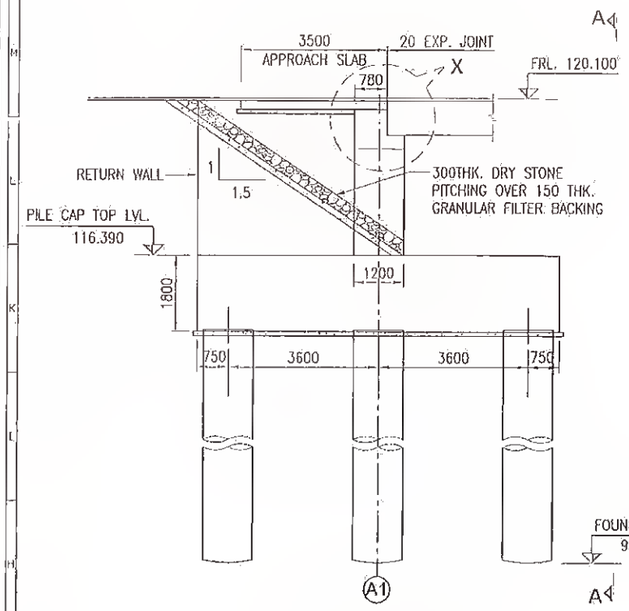

ELEVATION OF ABUTMENT

SCALE 1:100

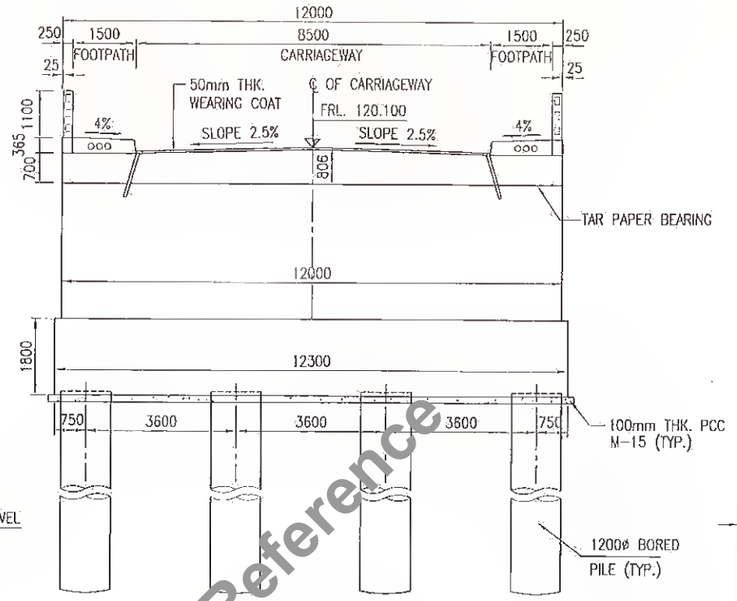

SECTION A-A

SCALE 1:100

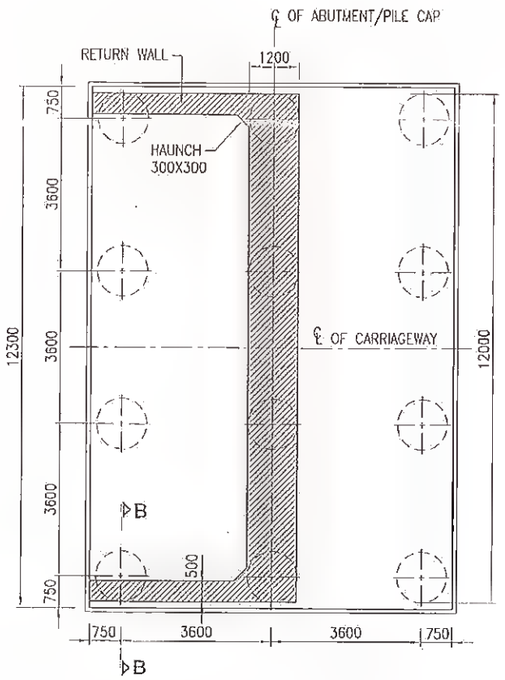

PLAN OF ABUTMENT/PILE CAP

SCALE 1:100

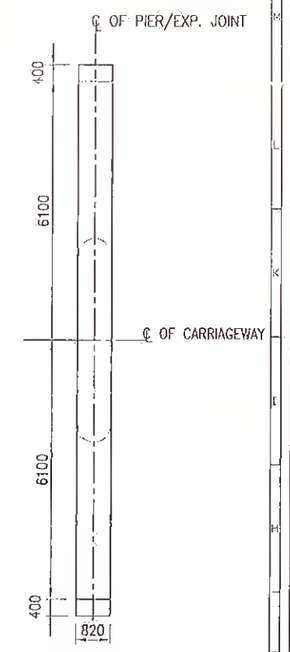

PIER CAP PLAN

SCALE 1:100

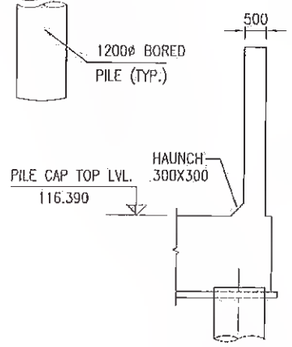

SECTION B-B

SCALE 1:100

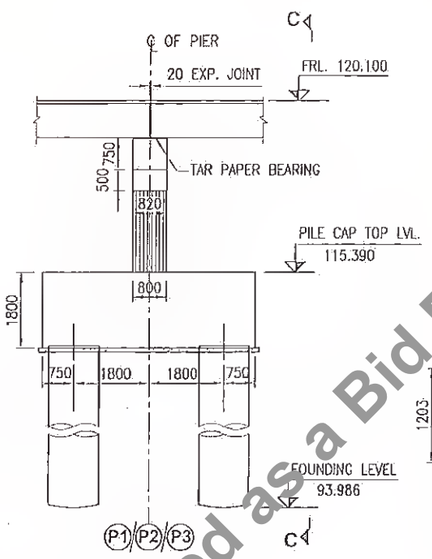

ELEVATION OF PIER

SCALE 1:100

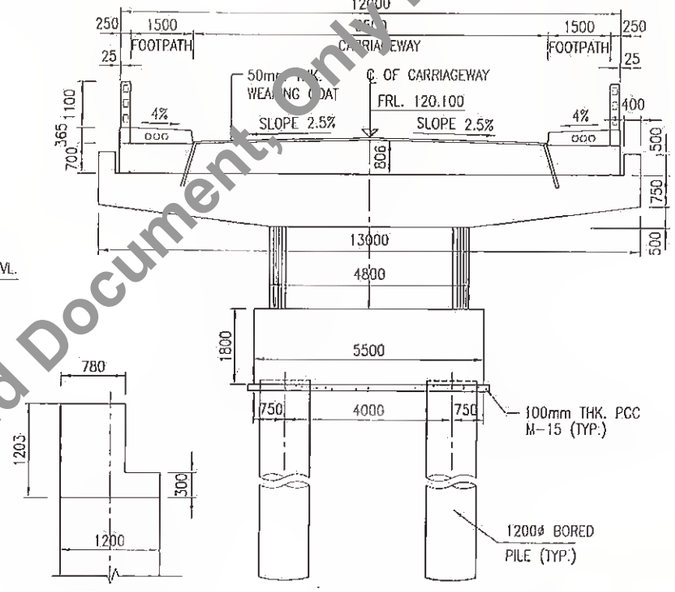

SECTION C-C

SCALE 1:100

DETAIL-X

SCALE 1:50

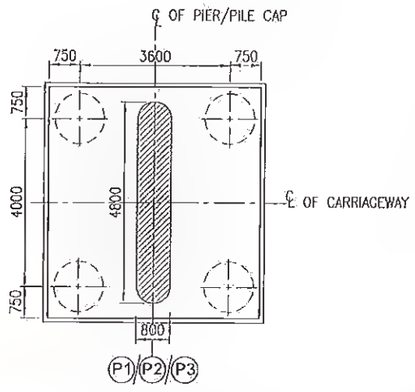

PLAN OF PIER/ PILE CAP

SCALE 1:100

DESIGN LOAD ON PILE OF ABUTMENT

MORMAL CASE:
- VERTICAL LOAD = 120T
- HORIZONTAL LOAD = 16T

SEISMIC CASE:
- VERTICAL LOAD = 135T
- HORIZONTAL LOAD = 33T

DESIGN LOAD ON PILE OF PIER

MORMAL CASE:
- VERTICAL LOAD = 180T
- HORIZONTAL LOAD = 3T

SEISMIC CASE:
- VERTICAL LOAD = 200T
- HORIZONTAL LOAD = 14T

NOTES:

1. ALL DIMENSIONS ARE IN MILLIMETRES AND LEVELS ARE IN METRES.UNLESS OTHERWISE SPECIFIED.
2. DIMENSIONS ARE NOT TO BE SCALED ONLY WRITTEN DIMENSIONS SHALL BE FOLLOWED.
3. ABUTMENT A2 IS MIRROR IMAGE OF ABUTMENT A1.

REFERENCE DRAWINGS :

a). GENERAL NOTES .....HOL/BSRDCL/13510/FDDPR/MISC/01.
b). CAD .....HOL/BSRDCL/13510/FDDPR/BR-8/01.
c). RCC DETAILS OF ABUT. A1 & A2 .....HOL/BSRDCL/13510/FDDPR/BR-8/04.
d). DIM. DETAILS OF BEARING & EXP. JOINT .....HOL/BSRDCL/13510/FDDPR/BR-8/08.
e). DETAILS OF KERBS, RAILINGS, CRASH BARRIER FOOTPATHS, AND DRAINAGE SPOUTS .....HOL/BSRDCL/13510/FDDPR/MISC/03.

Revisions					
No.	Date :	Description	Drawn	Checked	Approved

Client: Bihar State Road Development Corporation Ltd. — BIHAR STATE ROAD DEVELOPMENT CORPORATION LTD.

Project Title: WANA CONSULTING SERVICES FOR PREPARATION OF DETAILED PROJECT REPORT (DPR) FOR 4 NOS. OF ROAD/BRIDGE (MAKHDUMPUR, GOVINDPUR)

Consultant: HOLTEC CONSULTING PRIVATE LIMITED

Designed	Checked	Approved
SUD	SUD	RKR
Drawn	Scale	Date
SSH	AS SHOWN	OCT. 2018

Title : DIMENSION DETAILS OF ABUTMENT & PIER 4X10.0 M SPAN BRIDGE AT CH: KM. 34+120

Drawing No. : HOL/BSRDCL/13510/DPR/BR-8/02 — Sheet 1 — Rev. 0

CAD File Ref. : HOL/BSRDCL/13510/DPR/BR-8/02 — A3

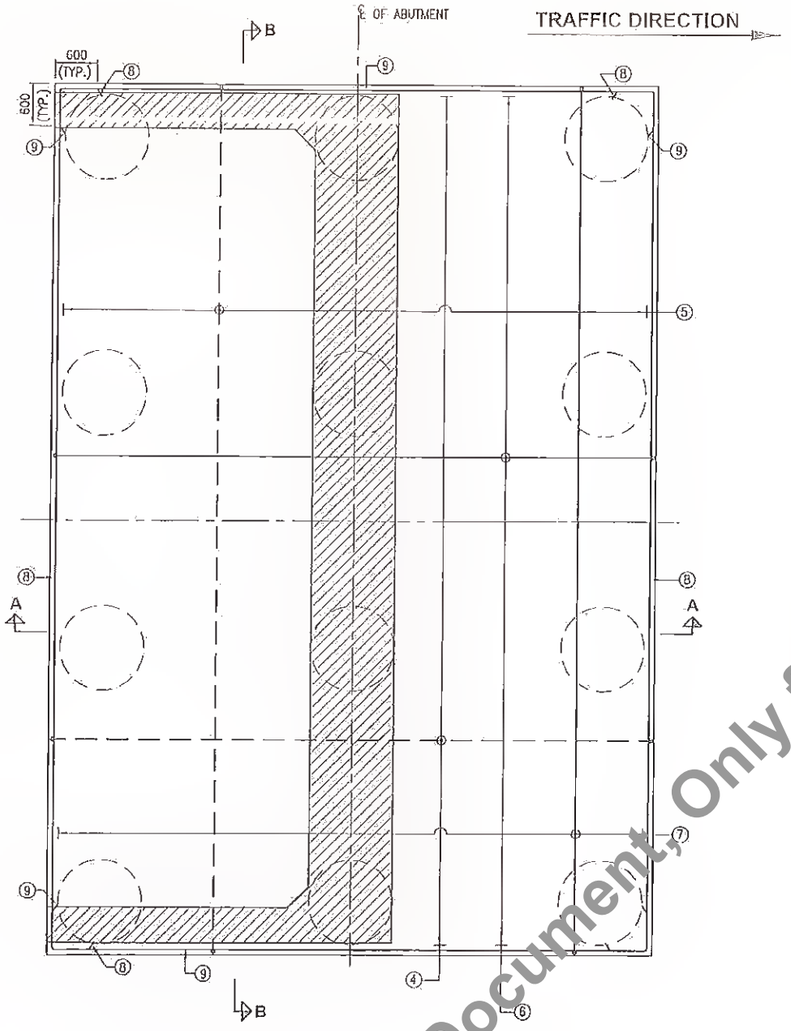

PLAN OF PILE CAP SHOWONG REINFORCEMENT
(SCALE 1:50)

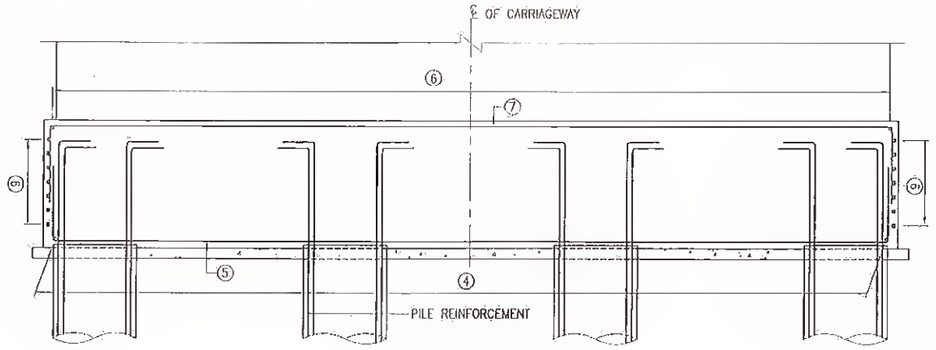

SECTION B-B
(SCALE 1:50)

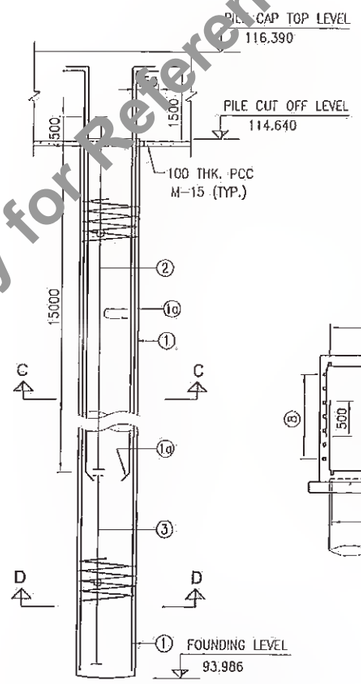

SECTIONAL ELEVATION OF PILE
(SCALE 1:75)

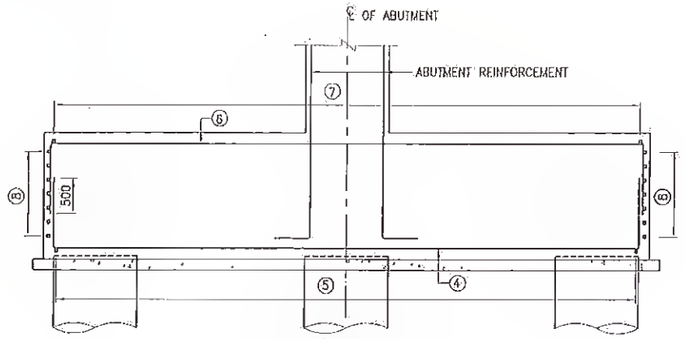

SECTION A-A
(SCALE 1:50)

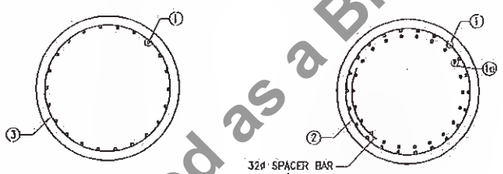

SECTION D-D
(SCALE 1:25)

SECTION C-C
(SCALE 1:25)

SCHEDULE OF REINFORCEMENT

BAR MARK	SHAPE OF BARS (NOT TO SCALE) / BRIDGE DESIGNATION	BAR DIA	SPACING IN MM/NO. OF BARS	M1	M2
1	M2 M1	25	22 NOS.	450	22079
1a	M2 M1	20	22 NOS.	450	16500
2		16	120	–	–
3		12	150	–	–
4	M1 M2 M1	20	150	1000	8500
5	M1 M2 M1	16	150	1000	12100
6	M1 M2 M1	10	150	1000	8500
7	M1 M2 M1	16	150	1000	12100
8	M2 M1 M1	12	200	600	12150
9	M1 M1 M2	12	200	600	8550

TOTAL QUANTITY OF STEEL FOR PILE & PILE CAP FOR EACH ABUTMENT = 53.01 TONS.

NOTES:

1. ALL DIMENSIONS ARE IN MILLIMETRES AND LEVELS ARE IN METRES.UNLESS OTHERWISE SPECIFIED.
2. DIMENSIONS ARE NOT TO BE SCALED ONLY WRITTEN DIMENSIONS SHALL BE FOLLOWED.
3. ABUTMENT A2 IS MIRROR IMAGE OF ABUTMENT A1.

REFERENCE DRAWINGS :

a). GENERAL NOTES .....HOL/BSRDCL/13510/FDDPR/MISC/01.
b). GAD .....HOL/BSRDCL/13510/FDDPR/BR-8/01.
c). DIM. DETAILS OF ABUTMENT .....HOL/BSRDCL/13510/FDDPR/BR-8/02.

LEGEND
TOP REINFORCEMENT
BOTTOM REINFORCEMENT

Revisions					
Rev.	Date :	Description	Drawn	Checked	Approved

Client: Bihar State Road Development Corporation Ltd. — BIHAR STATE ROAD DEVELOPMENT CORPORATION LTD.

Project Title : CONSULTANCY SERVICES FOR PREPARATION OF DETAILED PROJECT REPORT (DPR) FOR SH-103 (MANGHWE- GOVINDPUR)

Consultant: HOLTEC CONSULTING PRIVATE LIMITED

Designed	Checked	Approved
SUD	SUD	RKR
Drawn	Scale	Date
SSH	AS SHOWN	OCT. 2018

Title : PILE & PILE CAP REINFORCEMENT DETAILS OF ABUTMENT A1& A2 4X10.0 M SPAN BRIDGE AT CH: KM. 34+120

Drawing No. : HOL/BSRDCL/13510/DPR/BR-8/03 — Sheet 1 — Rev. 0

CAD File Ref. : HOL/BSRDCL/13504/DPR/BR-8/03 — A3

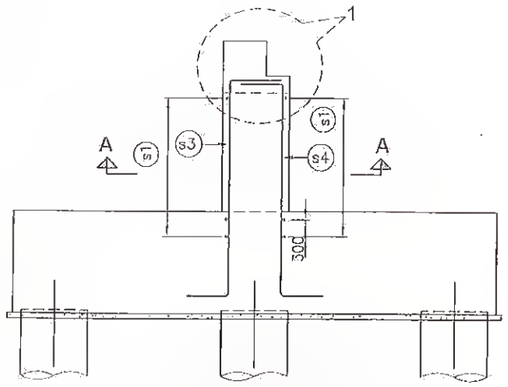

SECTIONAL ELEVATION OF ABUTMENT SHAFT
(SCALE:-1:75)

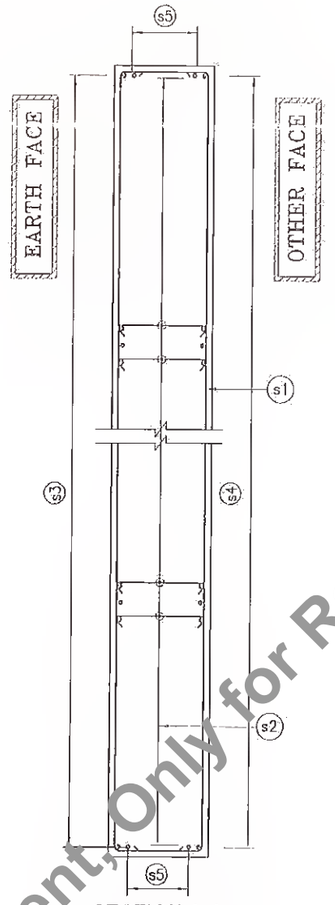

SECTION A-A
(SCALE:-1:50)

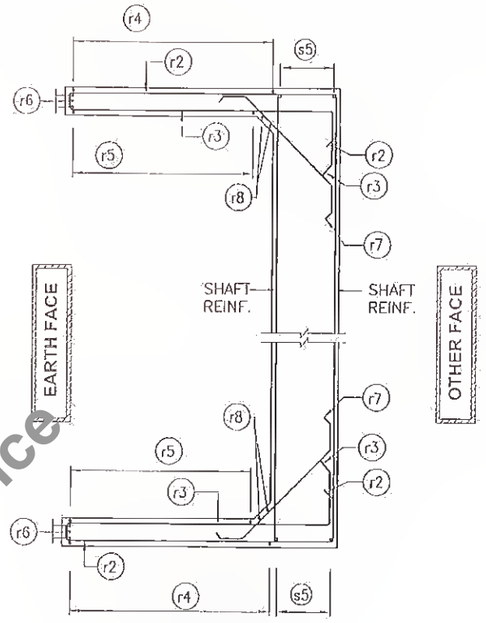

SECTION C-C
(JUNCTION DETAIL BETWEEN ABUT. SHAFT AND RETURN WALL)
(SCALE:-1:75)

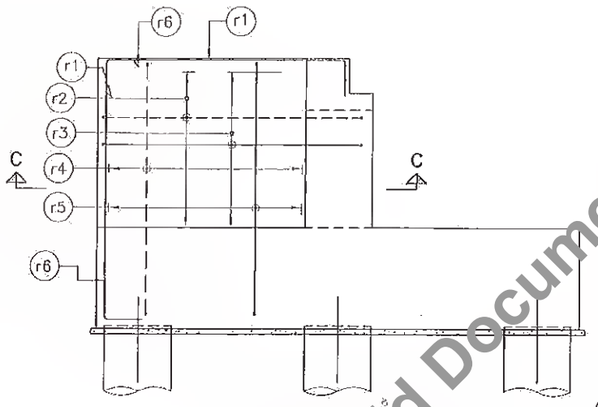

ELEVATION SHOWING REINF. DETAILS OF RETURN WALL
(SCALE:-1:75)

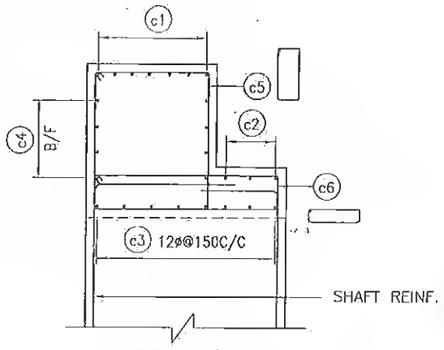

DETAIL-'1'
SCALE 1:25

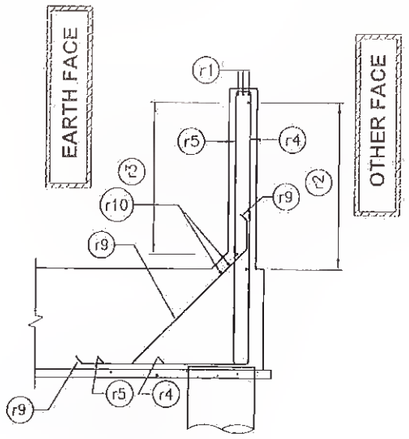

SECTION B-B
(SCALE:-1:75)

SCHEDULE OF REINFORCEMENT

BAR MARK	SHAPE OF BARS (NOT TO SCALE) / BRIDGE DESIGNATION	BAR DIA	SPACING IN MM/NO. OF BARS	M1	M2
s1	M2 M1 M1	12	150	750	11850
s2	M2	10	300	-	1075
s3	M2 M1 M1	16	120	500	3500
s4	M1 M2 M1	16	120	500	4500
s5	M2 M1 M1	16	18 NOS.	500	4500
r1	M1 M2 M1	16	3 NOS.	500	4300
r2	250 M2 M1	12	150	750	4800
r3	250 M2 M1	12	150	750	4800
r4	250 M1 M2	12	150	1500	5280
r5	250 M1 M2	12	150	2350	5280
r6	M2 M1 M1	16	6 NOS.	500	4300
r7	M1 M2 M1	10	300	300	2200
r8	M2 M1 M1	12	4 NOS.	300	5280
r9	300 M1 M2	10	300	900	2900
r10	M2	12	4 NOS.	--	11850
c1	M1 M2 M1	16	7 NOS.	250	11850
c2	M1 M2 M1	12	3 NOS.	250	11850
c3	M1 M2 M1	12	150	250	11850
c4	M1 M2 M1	12	150	250	11850
c5	M1 M2	12	200	680	800
c6	M1 M2	12	200	200	1100

TOTAL QUANTITY OF STEEL IN EACH ABUTMENT SHAFT, RETURN WALL & CAP = 5.554 TONS.

LEGENDS

REINF. AT EARTH FACE, NEAR FACE AND TOP FACE	———
REINF. AT OTHER FACE, FAR FACE AND BOTTOM FACE	- - - - - -
B/F	BOTH FACE

NOTES:

1. ALL DIMENSIONS ARE IN MILLIMETRES,UNLESS OTHERWISE SPECIFIED.
2. DIMENSIONS ARE NOT TO BE SCALED ONLY WRITTEN DIMENSIONS SHALL BE FOLLOWED.
3. ABUTMENT A2 IS MIRROR IMAGE OF ABUTMENT A1.

REFERENCE DRAWINGS :

a). GENERAL NOTES.....HOL/BSRDCL/13510/FDDPR/MISC/01.
b). GAD .....HOL/BSRDCL/13510/FDDPR/BR-8/01.
c). DIM. DETAILS OF ABUT. A1.....HOL/BSRDCL/13510/FDDPR/BR-8/02.

Revisions

Rev.	Date :	Description	Drawn	Checked	Approved

Client: Bihar State Road Development Corporation Ltd.
BIHAR STATE ROAD DEVELOPMENT CORPORATION LTD.

Consultant: HOLTEC CONSULTING PRIVATE LIMITED
HOLTEC CENTRE, A-18(EP), VIKAS PURI EXT., OUTER RING ROAD, NEW DELHI-110018
PHONE : 0124-2355655, 2355666, Fax 0124-2355115, 2355116

Project: CONSULTANCY SERVICES FOR PREPARATION OF DETAILED PROJECT REPORT (DPR) FOR SH-103 (MANGHWE- GOVINDPUR) .

MANAGER (TECH)
Bihar State Road Development Corporation Ltd.
PIU, Nawada

Designed	Checked	Approved
SUD	SUD	RKR
Drawn	Scale	Date
SSH	AS SHOWN	OCT. 2018

Title : REINFORCEMENT DETAILS OF ABUTMENT A1 4X10.0 M SPAN BRIDGE AT CH: KM. 34+120

Drawing No. : HOL/BSRDCL/13510/DPR/BR-8/04 | Sheet 1 | Rev. 0

CAD File Ref. : HOL/BSRDCL/13504/DPR/BR-8/04 | A3

TRAFFIC DIRECTION

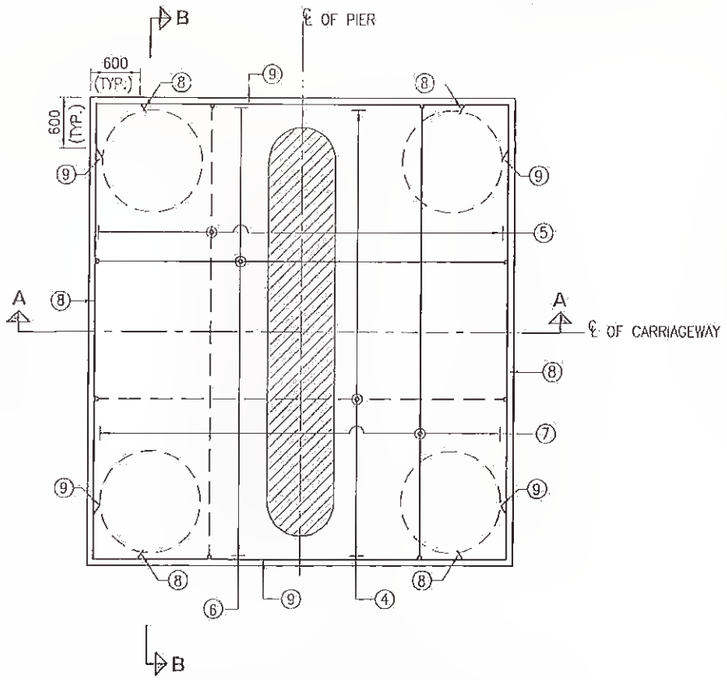

PLAN OF PILE CAP SHOWING REINFORCEMENT

(SCALE 1:50)

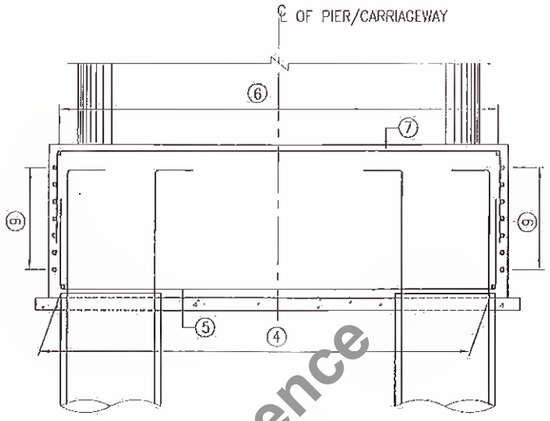

SECTION B-B

(SCALE 1:50)

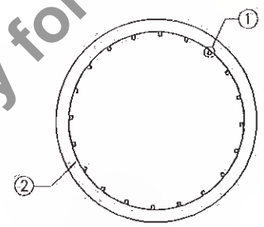

SECTION C-C

(SCALE 1:25)

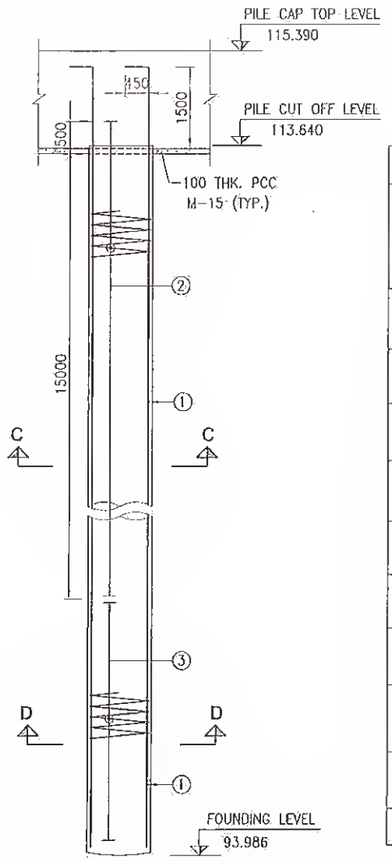

SECTIONAL ELEVATION OF PILE

(SCALE 1:75)

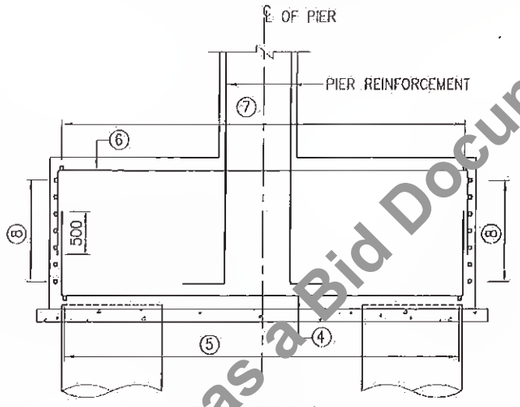

SECTION A-A

(SCALE 1:50)

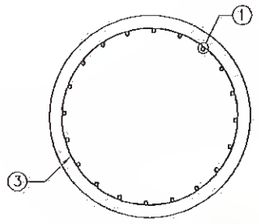

SECTION D-D

(SCALE 1:25)

SCHEDULE OF REINFORCEMENT					
BAR MARK	SHAPE OF BARS (NOT TO SCALE) / BRIDGE DESIGNATION	BAR DIA	SPACING IN MM/NO. OF BARS	M1	M2
1	M2 M1	20	22 NOS.	450	21075
2		16	120	–	–
3		12	150	–	–
4	M1 M2 M1	20	120	1000	4900
5	M1 M2 M1	20	120	1000	5300
6	M1 M2 M1	16	150	1000	4900
7	M1 M2 M1	16	150	1000	5300
8	M2 M1 M1	12	200	600	5350
9	M1 M2 M1	12	200	600	4950
TOTAL QUANTITY OF STEEL IN EACH PIER (PILE & PILE CAP) = 11.176 TONS.					

NOTES:

1. ALL DIMENSIONS ARE IN MILLIMETRES AND LEVELS ARE IN METRES.UNLESS OTHERWISE SPECIFIED.
2. DIMENSIONS ARE NOT TO BE SCALED ONLY WRITTEN DIMENSIONS SHALL BE FOLLOWED.

REFERENCE DRAWINGS :

a). GENERAL NOTES .....HOL/BSRDCL/13510/FDDPR/MISC/01.

b). GAD .....HOL/BSRDCL/13510/FDDPR/BR-8/01.

c). DIM. DETAILS OF PIER.....HOL/BSRDCL/13510/FDDPR/BR-8/02.

LEGEND

TOP REINFORCEMENT

BOTTOM REINFORCEMENT

Revisions					
Rev.	Date :	Description	Drawn	Checked	Approved

Client: Bihar State Road Development Corporation Ltd. — BIHAR STATE ROAD DEVELOPMENT CORPORATION LTD.

Project: CONSULTANCY SERVICES FOR PREPARATION OF DETAILED PROJECT REPORT (DPR) FOR SH-103 (MANGHWE- GOVINDPUR)

Consultant: HOLTEC CONSULTING PRIVATE LIMITED

Designed	Checked	Approved
SUD	SUD	RKR
Drawn	Scale	Date
SSH	AS SHOWN	OCT. 2018

Title : PILE & PILE CAP REINFORCEMENT DETAILS OF PIER P1 TO P3 4X10.0 M SPAN BRIDGE AT CH: KM.34+120

Drawing No. : HOL/BSRDCL/13510/DPR/BR-8/05 — Sheet 1 — Rev. 0

CAD File Ref. : HOL/BSRDCL/13504/DPR/BR-8/05 — A3

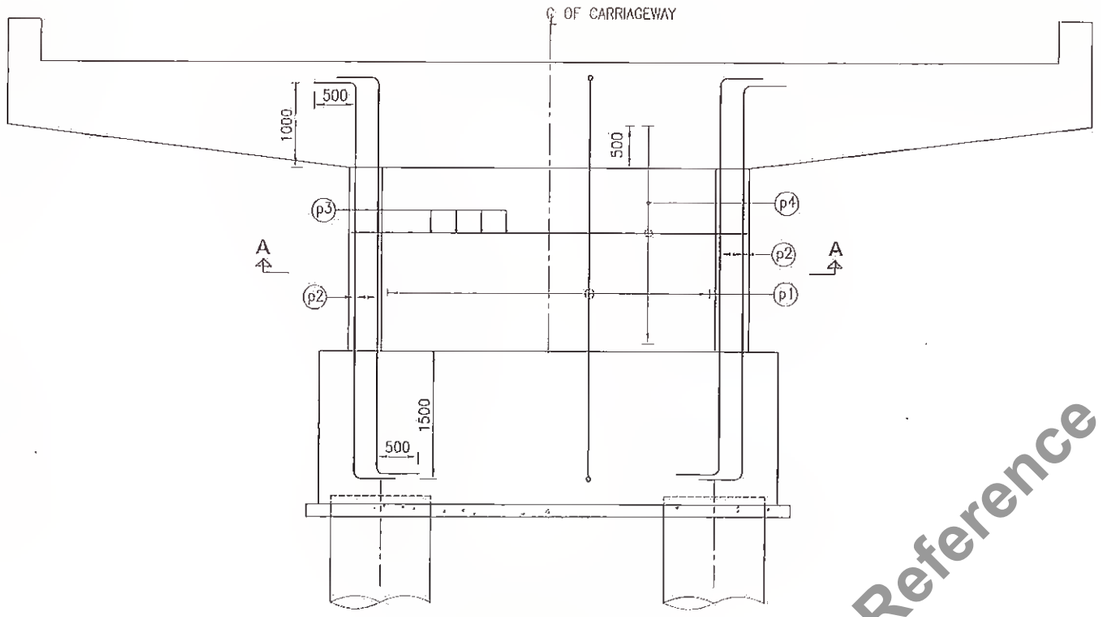

SECATIONAL ELEVATION OF PIER
(SCALE 1:50)

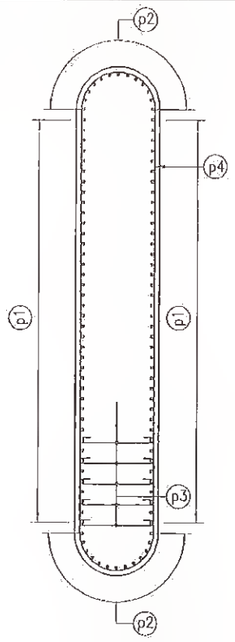

SECTION A-A
(SCALE 1:40)

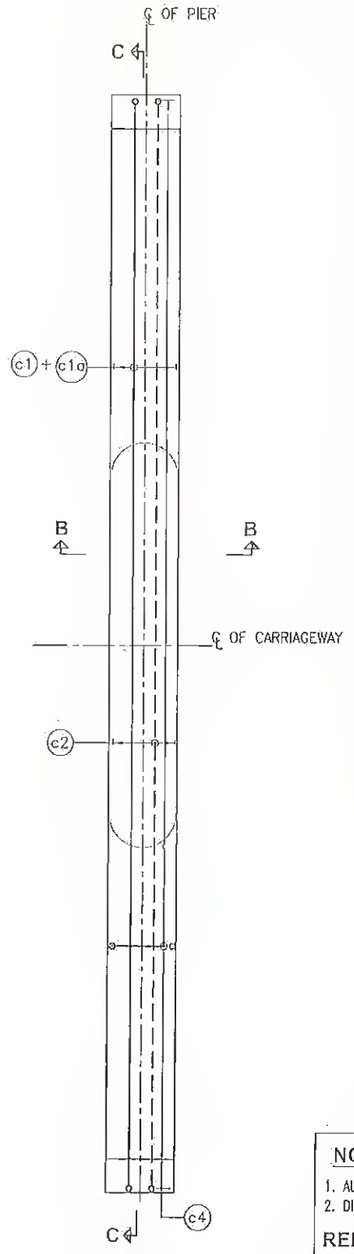

PLAN SHOWING REINF. DETAILS OF PIER CAP
(SCALE 1:50)

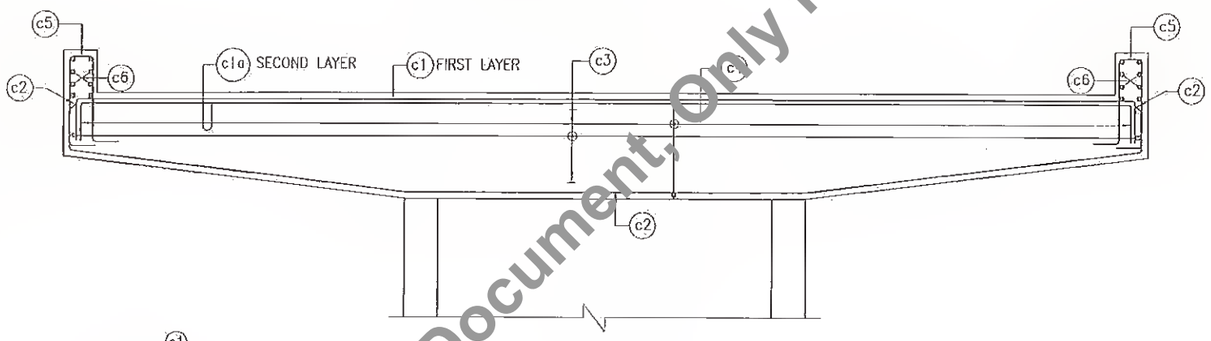

SECTION C-C
(SCALE 1:50)

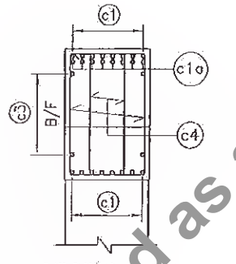

SECTION B-B
(SCALE 1:40)

SCHEDULE OF REINFORCEMENT

BAR MARK	SHAPE OF BARS (NOT TO SCALE) / BRIDGE DESIGNATION	BAR DIA	SPACING IN MM/NO. OF BARS	M1	M2
p1	M1 M2 M1	16	80 NOS.	500	4750
p2	M1 M2 M1	16	26 NOS.	500	4750
p3	M2	10	300	–	700
p4	M2 M1	16	200	700	4000
c1	M2	32	8 NOS.	–	12800
c1a	M2	25	8 NOS.	–	12800
c2	M2	16	8 NOS.	750	12800
c3	M2	16	150	750	12800
c4	M1 M2	16	150	700	1100
c5	275 M1 M2	20	150	300	1000
c6	M2	12	150	–	700

TOTAL QUANTITY OF STEEL IN EACH PIER SHAFT & PIER CAP = 3.14 TONS.

LEGEND
TOP REINFORCEMENT
BOTTOM REINFORCEMENT

NOTES:
1. ALL DIMENSIONS ARE IN MILLIMETRES AND LEVELS ARE IN METRES.UNLESS OTHERWISE SPECIFIED.
2. DIMENSIONS ARE NOT TO BE SCALED ONLY WRITTEN DIMENSIONS SHALL BE FOLLOWED.

REFERENCE DRAWINGS :
a). GENERAL NOTES.....HOL/BSRDCL/13510/FDDPR/MSC/01.
b). CAD.....HOL/BSRDCL/13510/FDDPR/BR-8/01.
c). DIM. DETAILS OF PIER.....HOL/BSRDCL/13510/FDDPR/BR-8/02.

Revisions					
Rev.	Date :	Description	Drawn	Checked	Approved

Client: Bihar State Road Development Corporation Ltd. — BIHAR STATE ROAD DEVELOPMENT CORPORATION LTD. — CONSULTANCY SERVICES FOR PREPARATION OF DETAILED PROJECT REPORT (DPR) FOR SH-103 (MANGHWE- GOVINDPUR)

Bihar State Road Devp. Corp. Ltd. MANAGER (IT) PIU, Nawada

Consultant: HOLTEC CONSULTING PRIVATE LIMITED

Designed	Checked	Approved
SUD	SUD	RKR
Drawn	Scale	Date
SSH	AS SHOWN	OCT. 2018

Title : RCC DETAILS OF PIERS AND PIERS CAP 4X10.0 M SPAN BRIDGE AT CH: KM. 34+120

Drawing No. : HOL/BSRDCL/13510/DPR/BR-8/06 — Sheet 1 — Rev. 0

CAD File Ref. : HOL/BSRDCL/13504/DPR/BR-8/06 — A3

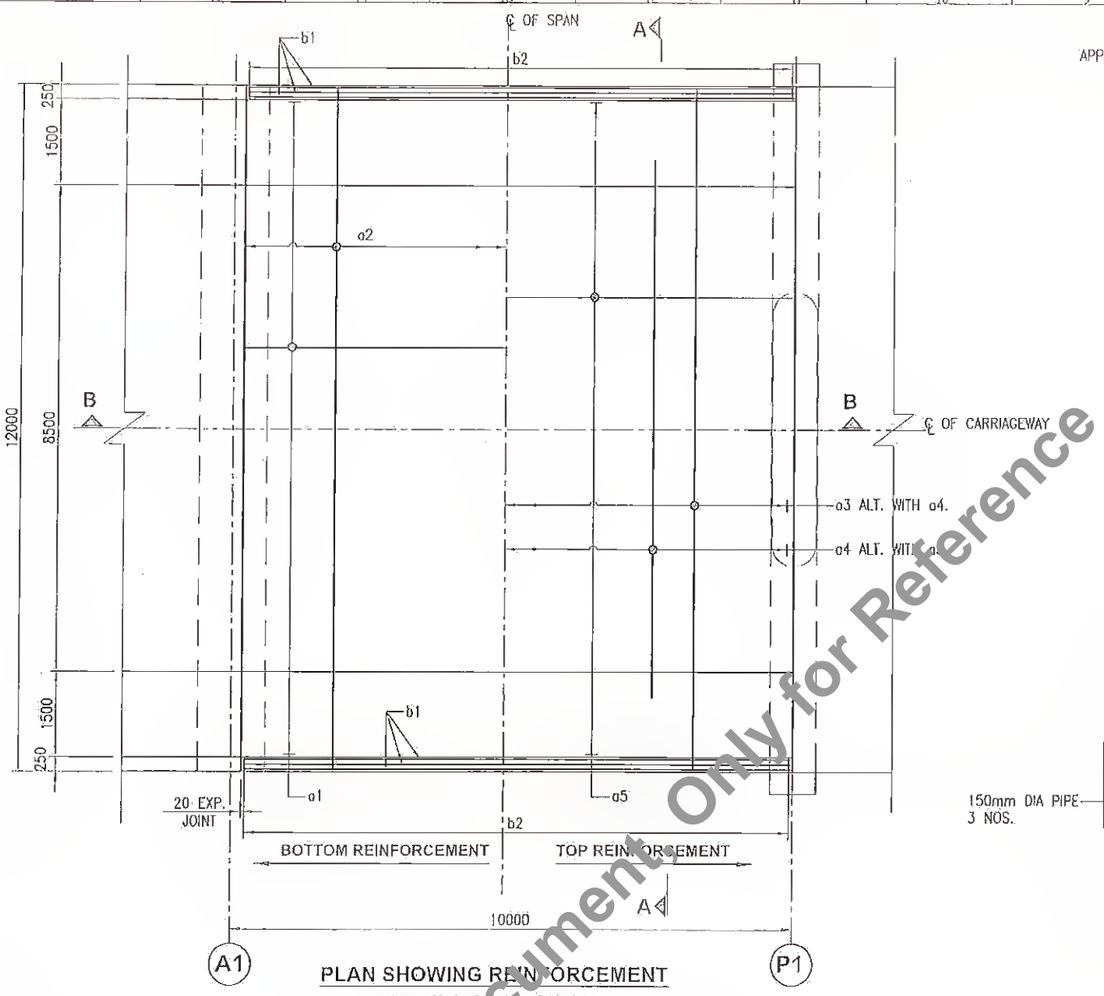

PLAN SHOWING REINFORCEMENT DETAILS OF DECK SLAB

(SCALE 1:75)

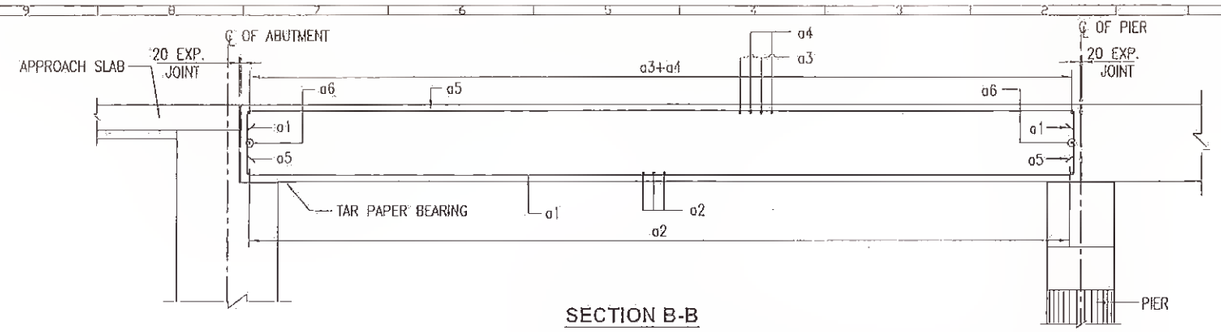

SECTION B-B

(SCALE 1:50)

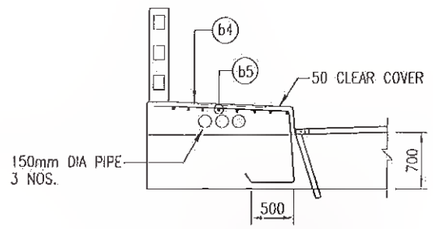

DETAIL OF REINFORCEMENT IN FOOTPATH

(SCALE 1:50)

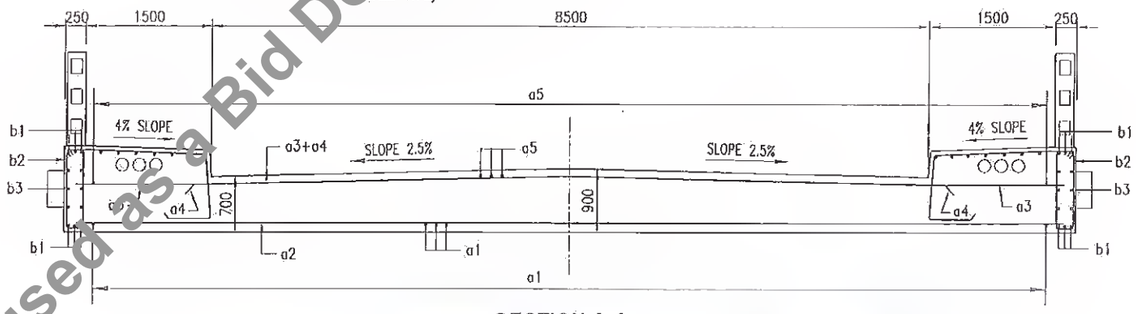

SECTION A-A

(SCALE 1:50)

SCHEDULE OF REINFORCEMENT

BAR MARK	SHAPE OF BARS (NOT TO SCALE) / BRIDGE DESIGNATION	BAR DIA	SPACING IN MM/NO. OF BARS	M1	M2
a1	M1 M2 M1	25	125	300	9900
a2	M2	12	125	–	11800
a3	M2	12	250	–	11800
a4	M2	12	250	–	9000
a5	M1 M2 M1	12	125	300	9900
a6	M2	25	12 NOS.	–	11800
b1	M2	10	3 NOS.	–	11900
b2	M2 M1	10	250	200	900
b3	M2	10	12 NOS.	–	11900
b4	M2 500 M1	10	200	850	1600
b5	M2	10	200	=	9900

TOTAL QUANTITY OF STEEL IN EACH DECK SLAB = 7.087 TONS.

NOTES:

1. ALL DIMENSIONS ARE IN MILLIMETRES.UNLESS OTHERWISE SPECIFIED.
2. DIMENSIONS ARE NOT TO BE SCALED ONLY WRITTEN DIMENSIONS SHALL BE FOLLOWED.

REFERENCE DRAWINGS :

a). GENERAL NOTES.....HOL/BSRDCL/13510/FDDPR/MISC/01.
b). GAD .....HOL/BSRDCL/13510/FDDPR/BR-8/01.
c). DIM. DETAILS OF ABUT.. A1 & A2.....HOL/BSRDCL/13510/FDDPR/BR-8/02.
d). DETAILS OF BEARING AND EXPANSION JOINT..... HOL/BSRDCL/13510/FDDPR/BR-8/08.

Revision					
Rev.	Date:	Description	Drawn	Checked	Approved

Client: Bihar State Road Development Corporation Ltd. PIU, Nawada

DGM (Consultancy) Bihar State Road Development Corporation Ltd.

Project Title : CONSULTANCY SERVICES FOR PREPARATION OF DETAILED PROJECT REPORT (DPR) FOR NawadaSH-103 (MANGHWE- GOVINDPUR)

Consultant: HOLTEC CONSULTING PRIVATE LIMITED

Designed	Checked	Approved
SUD	SUD	RKR
Drawn	Scale	Date
SSH	AS SHOWN	OCT. 2018

Title : RCC DETAIL OF SUPER STRUCTURE 4X10.0 M SPAN BRIDGE AT CH: KM. 34+120

Drawing No. HOL/BSRDCL/13510/DPR/BR-8/07 | Sheet 1 | Rev. 0

CAD File Ref : HOL/BSRDCL/13510/DPR/BR-8/01 | A3

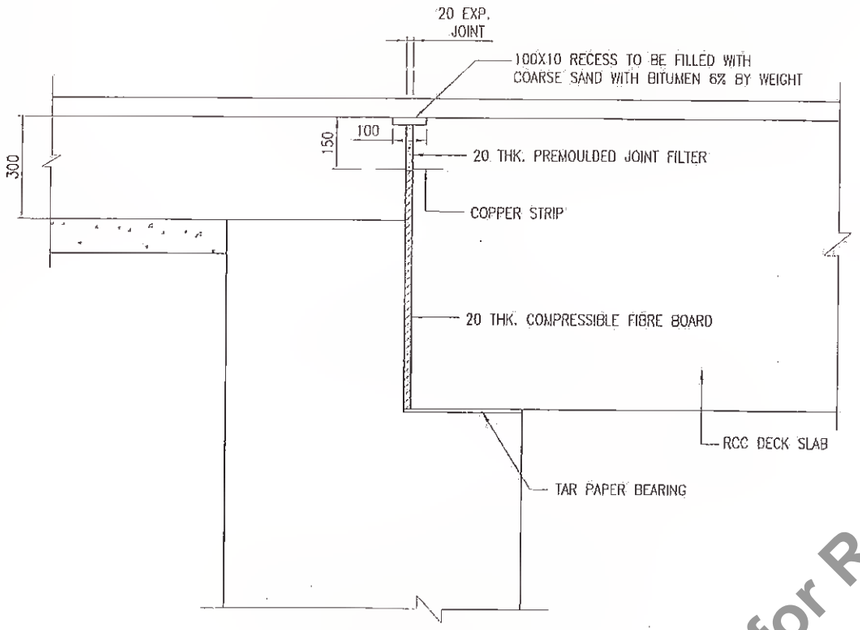

SECTION OF ABUTMENT SHOWING EXPANSION JOINT DETAIL

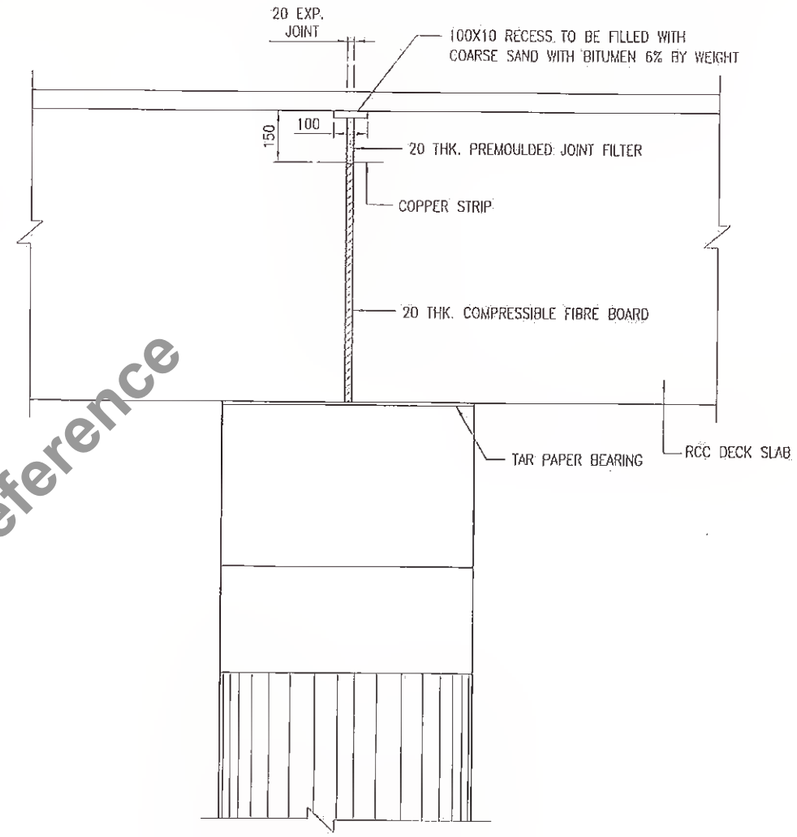

SECTION OF PIER SHOWING EXPANSION JOINT DETAIL

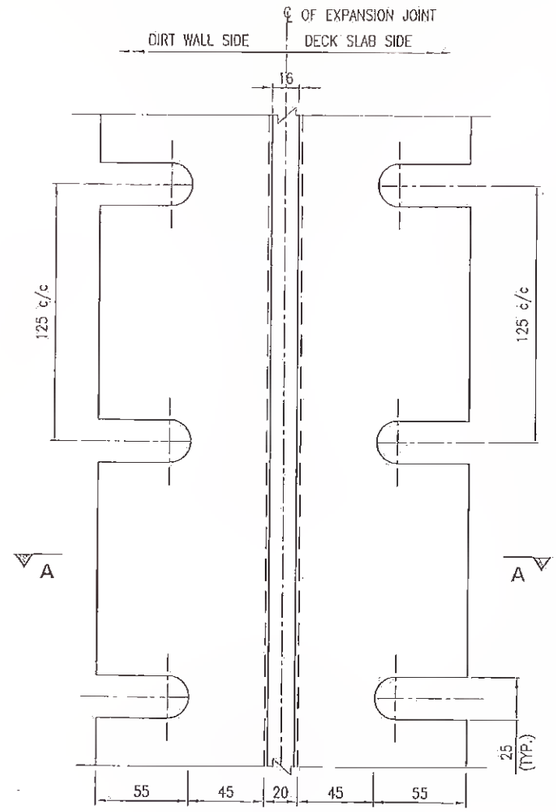

DETAIL OF COPPER STRIP

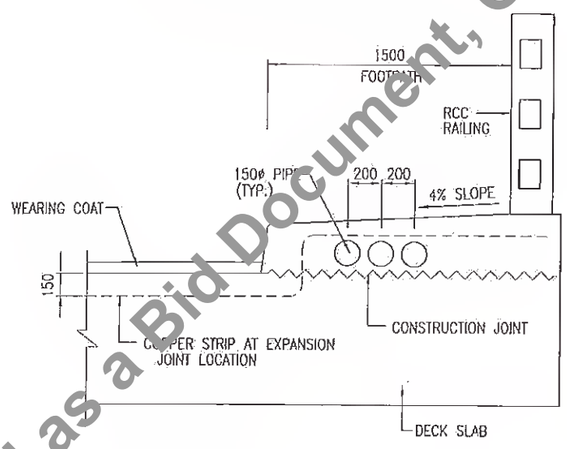

EXPANSION JOINT DETAIL AT FOOTPATH

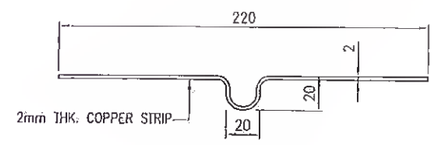

SECTION A-A

NOTES :

1. ALL DIMENSIONS ARE IN MILLIMETRES AND LEVELS ARE IN METRES UNLESS OTHERWISE SPECIFIED.
2. DIMENSIONS ARE NOT TO BE SCALED ONLY WRITTEN DIMENSIONS SHALL BE FOLLOWED.
3. JOINT FILLER SHALL CONFORM TO IS: 1838. PRODUCTS WITH ISI CERTIFICATION MARK SHALL ONLY BE USED.

REFERENCE DRAWINGS :

a). GENERAL NOTES ..... HOL/BSRDCL/13510/FDDPR/MISC/01.
b). GENERAL ARRANGEMENT DRAWING ..... HOL/BSRDCL/13510/FDDPR/BR-8/01.

Revision					
Rev.	Date	Description	Drawn	Checked	Approved

Client: Bihar State Road Development Corporation Ltd. PO, Nawada

DGM (Tech) Bihar State Road Devp. Corporation Ltd. Nawada

Project Title : CONSULTANCY SERVICES FOR PREPARATION OF DETAILED PROJECT REPORT (DPR) FOR SH-103 (MANGHWE- GOVINDPUR)

Consultant: HOLTEC CONSULTING PRIVATE LIMITED
HOLTEC CENTRE, A BLOCK, SHEKHANTHOLI, SECTOR-20, HUDA, NOIDA-201301 (U.P.)
PHONE : 0120-2385095, 2385098, FAX 0120-2385114, 2565116

Designed	Checked	Approved
SUD	SUD	AKR
Drawn: SSH	Scale: AS SHOWN	Date: OCT. 2018

Title : DIM. DETAILS OF BEARING & EXP. JOINT 4X10.0 M SPAN BRIDGE AT CH: KM. 34+120

Drawing No. HOL/BSRDCL/13510/DPR/BR-8/08 — Sheet 1 — Rev. 0

CAD File Ref : HOL/BSRDCL/13510/DPR/BR-8/08 — A3

MISCELLANEOUS

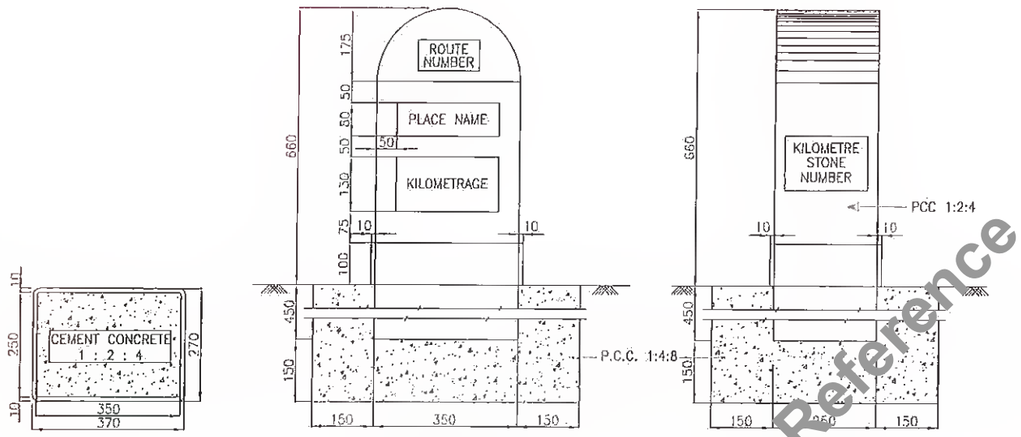

SECTIONAL PLAN — FRONT ELEVATION — SIDE ELEVATION

TYPICAL DETAILS OF ORDINARY KILOMETRE STONE

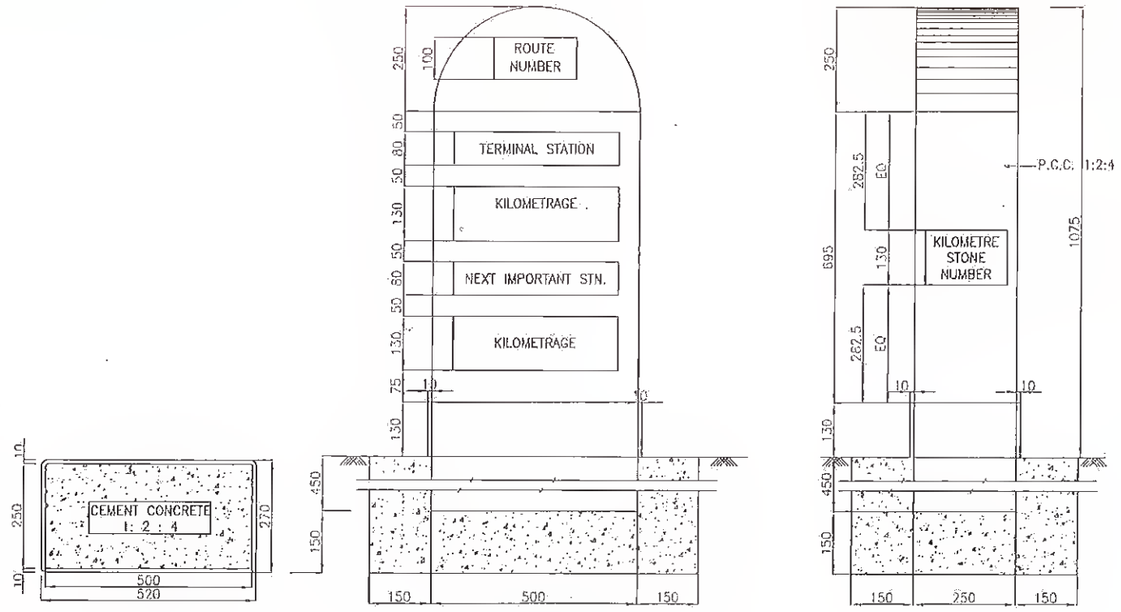

SECTIONAL PLAN — FRONT ELEVATION — SIDE ELEVATION

TYPICAL DETAILS OF FIFTH (5th) KILOMETRE STONE

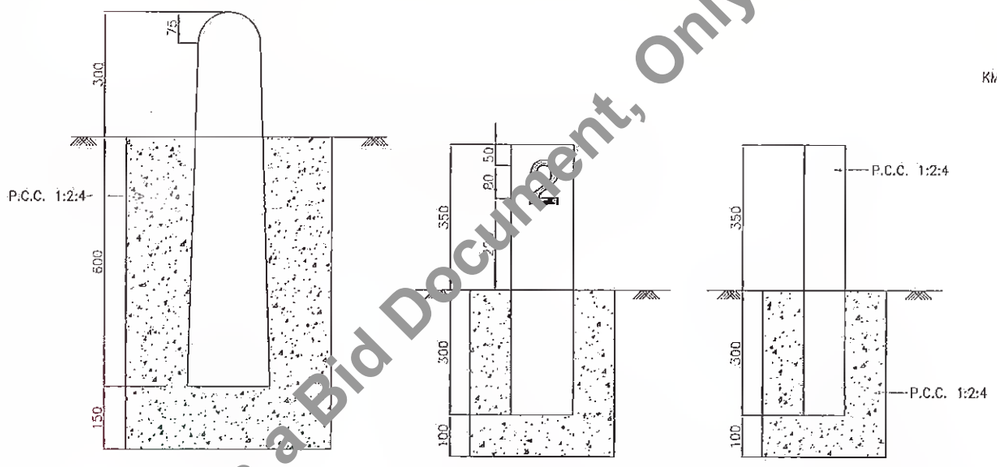

FRONT ELEVATION — FRONT ELEVATION — SIDE ELEVATION

TYPICAL DETAILS OF 200 METRE STONE

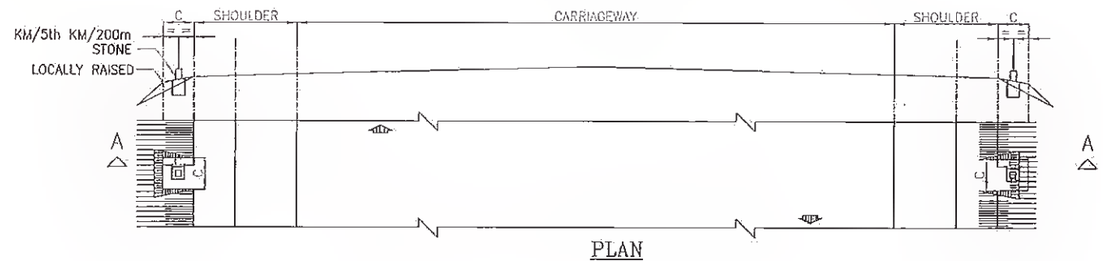

PLAN

LOCATION OF KILOMETRE & 200 METRE STONE

NOTES

* ALL DIMENSIONS ARE IN MILLIMETRES UNLESS OTHERWISE SPECIFIED
* DIMENSIONS ARE NOT TO BE SCALED AND ONLY WRITTEN DIMENSIONS TO BE FOLLOWED
* DETAILS OF ORDINARY KM STONE AND 5th KM STONE ARE GENTERALLY BASED ON IRC: 8-1980
* DETAILS OF 200m STONE ARE GENERALLY BASED ON IRC: 26-1967
* VALUE OF 'C' IS 1500mm FOR KM/5th KM STONE & 1000mm FOR 200m STONE

Revisions					
Rev.	Date	Description	Drawn	Checked	Approved

Client : Bihar State Road Development Corporation Ltd. PIU, Nawada

MANAGER (Tech.) Bihar State Road Development Corporation Ltd. PIU, Nawada

Project : CONSULTANCY SERVICES FOR PREPARATION OF DETAILED PROJECT REPORT (DPR) FOR P1U, Nawada-103 (MANGHWE- GOVINDPUR)

Consultant: HOLTEC CONSULTING PRIVATE LIMITED
HOLTEC CENTRE, A BLOCK, SUSHANT LOK, GURGAON-122001 HARYANA, INDIA
PHONE : 0124-2385095 , 2385096 , FAX 0124-2385114 , 2385116

Designed	Checked	Approved
YJ	JIG	JIG
Drawn: SVR	Scale: NTS	Date: DEC. 2021

Title : TYPICAL DETAIL OF 200M, IKM STONE AND 5TH KM STONE

Drawing No. : HOL/BSRDCL/DFR/13510/MISC/KM STONE — Rev. 0 — Sheet

CAD File Ref. : HOL/BSRDCL/DFR/13510/MISC/KM STONE — A3

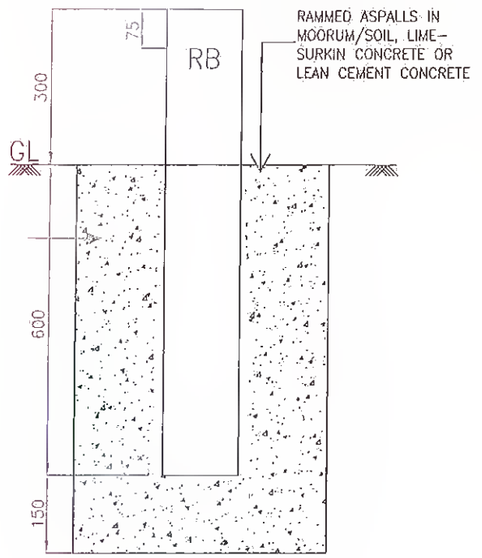

FRONT ELEVATION

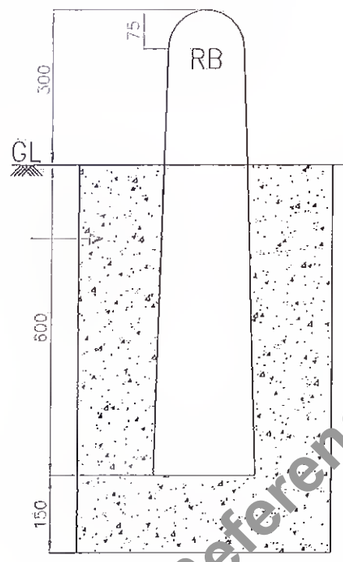

FRONT ELEVATION

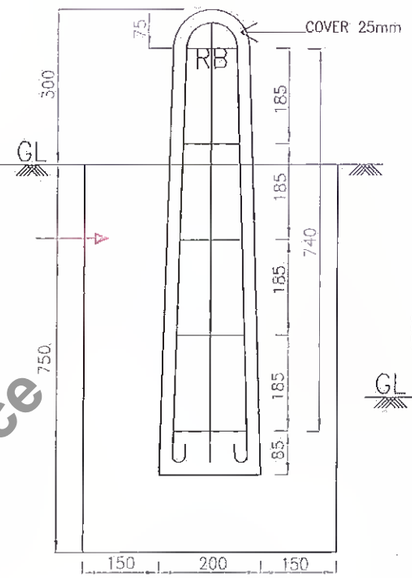

SECTION AT A-A

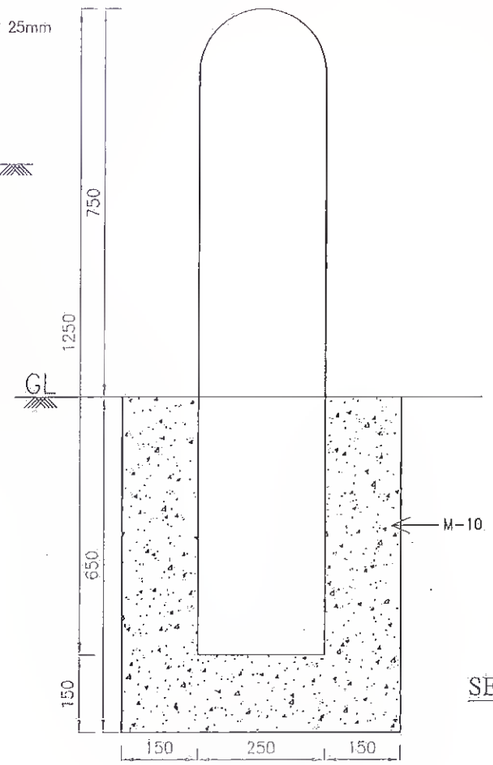

FRONT ELEVATION

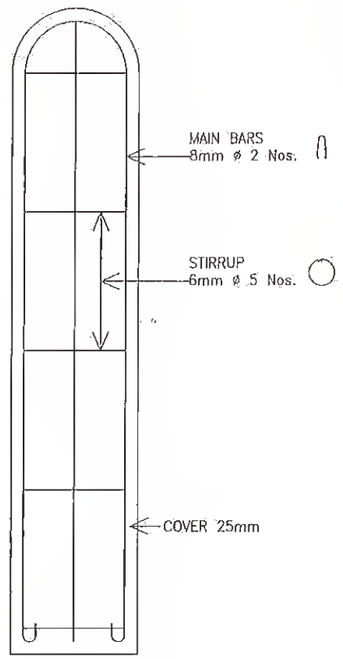

SECTION AT B-B

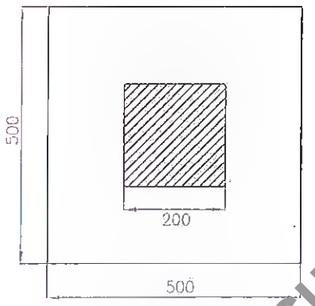

PLAN

TYPE DESIGN WITH STONE AS MATERIAL

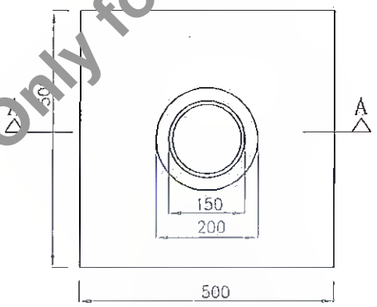

PLAN

TYPE DESIGN WITH R.C.C. AS MATERIAL

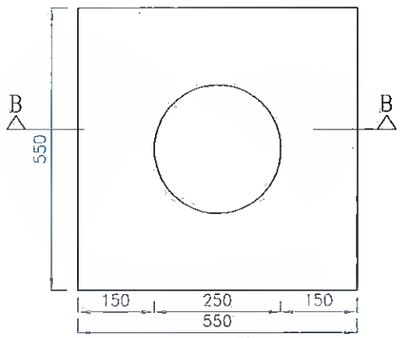

PLAN

BAR BENDING SCHEDULE

S.NO.	TYPE OF M.S BAR	NO. OF BARS	SHAPE OF BARS	DIA IN mm	LENTH OF BAR INCLUDING HOOKS
1	MAIN BARS	2	∩	6mm	1.84m
2	TOPMOST STIRRUP	1	○	6mm	370mm
3	STIRRUP (NEXT FSOM TOP)	1	○	6mm	405mm
4	STIRRUP (SECOND FSOM TOP)	1	○	6mm	440mm
5	STIRRUP (THIRD FSOM TOP)	1	○	6mm	475mm
6	BOTTOM STIRRUP	1	○	6mm	810mm

Revision				
Rev.	Date	Description	Drawn	Checked	Approved

Client : Bihar State Road Development Corporation Ltd.
MANAGER (TECH) PIU
Bihar State Road Devp. Corp. Ltd.
PIU, Nawada

Proect : CONSULTANCY SERVICES FOR PREPARATION OF DETAILED PROJECT REPORT (DPR) FOR SH-103 (MANGHWE- GOVINDPUR)

Consultant: HOLTEC CONSULTING PRIVATE LIMITED
HOLTEC CENTRE, A BLOCK, SUSHANT LOK, GURGAON-122001 HARYANA, INDIA
PHONE : 0124-2385095 , 2385096 , FAX 0124-2385114 , 2385116

Designed	Checked	Approved
YJ	JIG	JIG
Drawn: SVR	Scale: NTS	Date: DEC. 2021

Title : TYPICAL DETAILS OF BOUNDARY STONES & GUARD POST

Drawing No. : HOL/BSRDCL/DFR/13510/MISC/B STONE — Rev. 0 — Sheet

CAD File Ref. : HOL/BSRDCL/DFR/13510/MISC/B STONE — A3

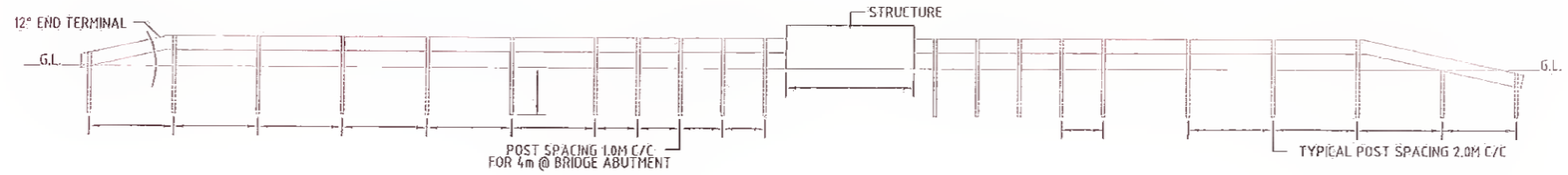

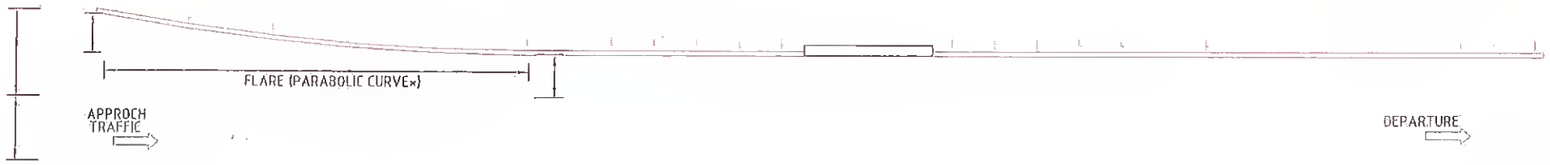

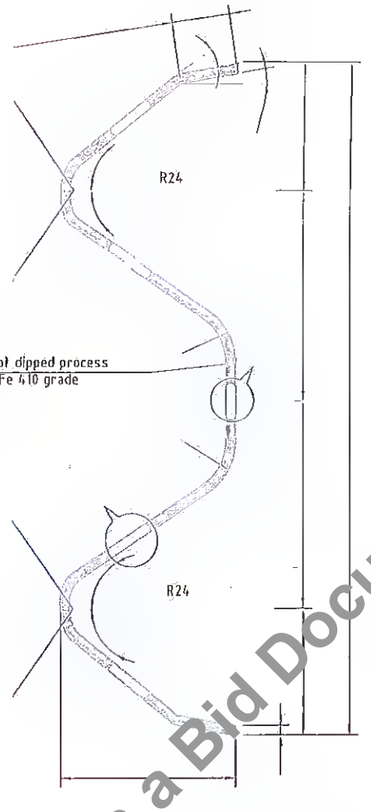

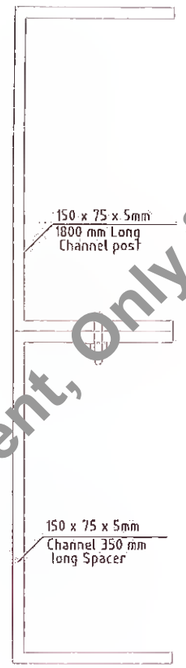

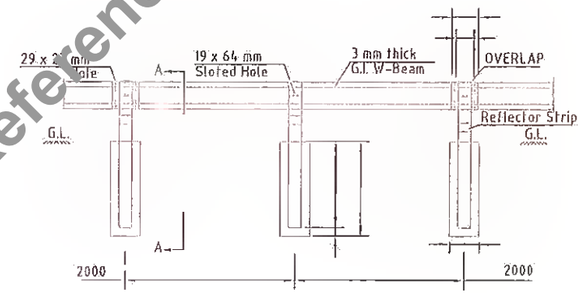

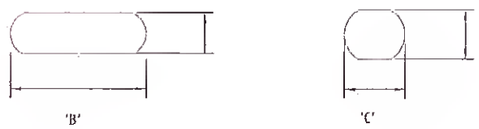

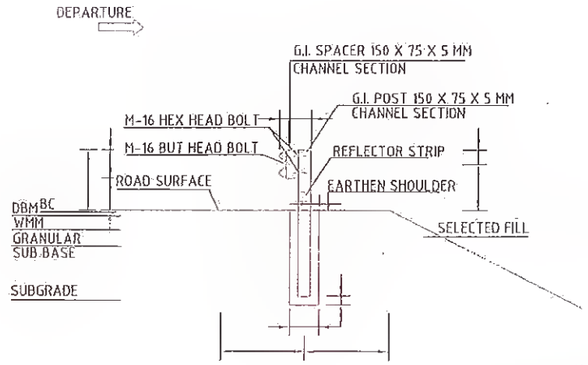

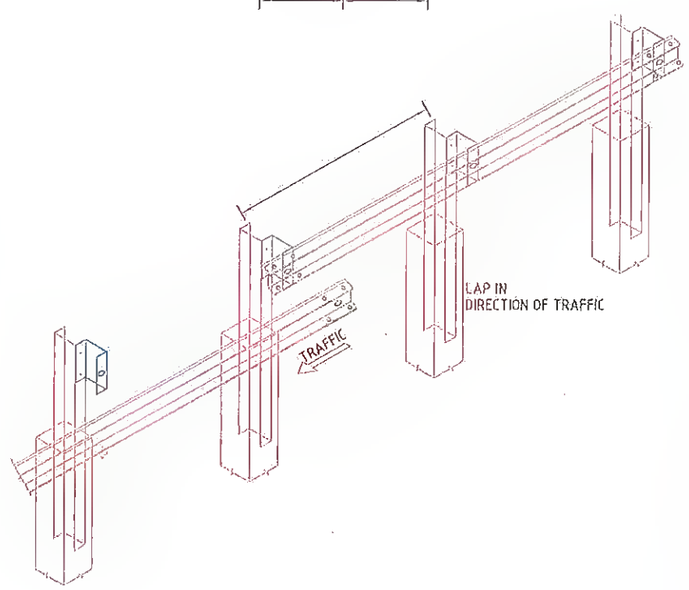

1. ALL THE DIMENSIONS ARE IN MILLIMETER UNLESS SPECIFIED.
2. CORRUGATED METAL BEAM SHALL BE 3MM THICK.
3. W-BEAM SHALL BE COLD ROLL FORMED SECTION.
4. ALL RAW MATERIAL SHALL CONFORM TO IS 5986 (Gr.Fe 410:ST-42)
HOT DIP GALVANISED TO 550 gm/Sqm.
5. SPACERS SHALL BE AS PER IS :2062-1992
6. IN FOOTING M15 GRADE SHALL BE PROVIDED OF SIZE 350mmX350mmX1100mm
7. EVERY CHANNEL POST SHALL BE 2M C/C APART EXCEPT STRUCTURE LOCATIONS.
8. THE ENDS OF FASTNERS ARE TO BE FLARED BY PNEUMATIC OPERATION
TO ENSURE THAT THE BOLTS ARE NOT REMOVABLE
9. *PARABOLIC CURVE

EQUATION : $y = \frac{wx^2}{l^2}$

where
w = tangent offset at maximum flare (1200mm).
l = total length of flare (11400mm).
y = tangent offset at any point in guardrail flare.
x = distance from point of tangent to any point of offset.

Revision					
Rev.	Date	Description	Drawn	Checked	Approved

Client:
Bihar State Road Development Corporation Ltd
Patna, Nawada
DGM (Tech)
Bihar State Road Deve. Corp. Ltd

Project Title :
CONSULTANCY SERVICES FOR PREPARATION OF DETAILED PROJECT REPORT (DPR) FOR SH-103 (MANGHWE- GOVINDPUR)

Consultant: HOLTEC CONSULTING PRIVATE LIMITED

Designed	Checked	Approved
VJ	JIG	JIG
Drawn	Scale	Date
SVR	NTS	DEC. - 2021

Title : TYPICAL DETAILS OF METAL CRASH BARRIER

Drawing No. HOL/BSRDCL/DFR/13510/MISC/MCB
Rev.
Sheet 08
CAD File Ref :
A3

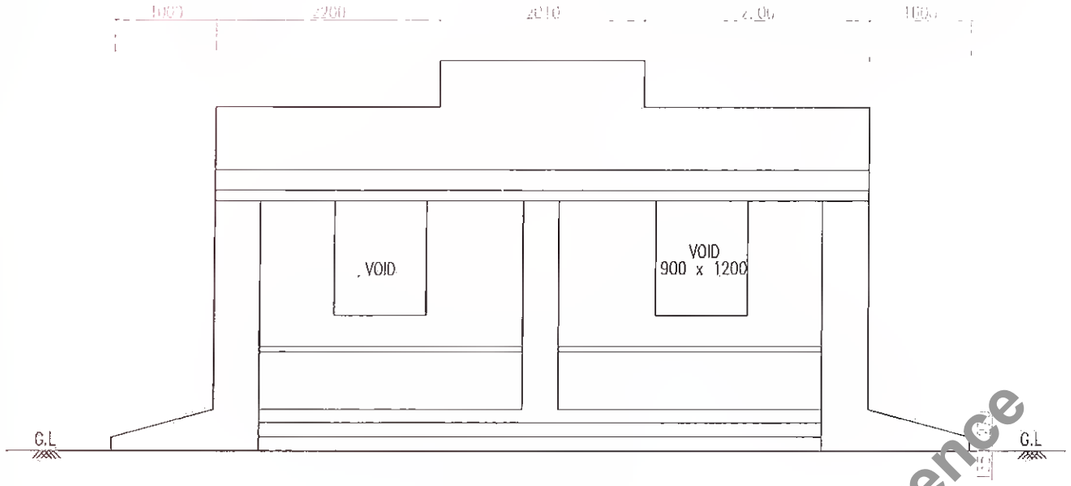

ELEVATION

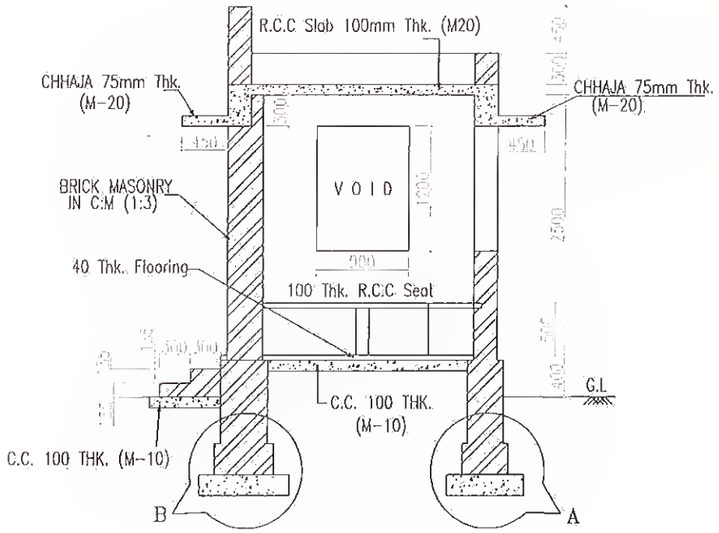

SECTION AT A-A

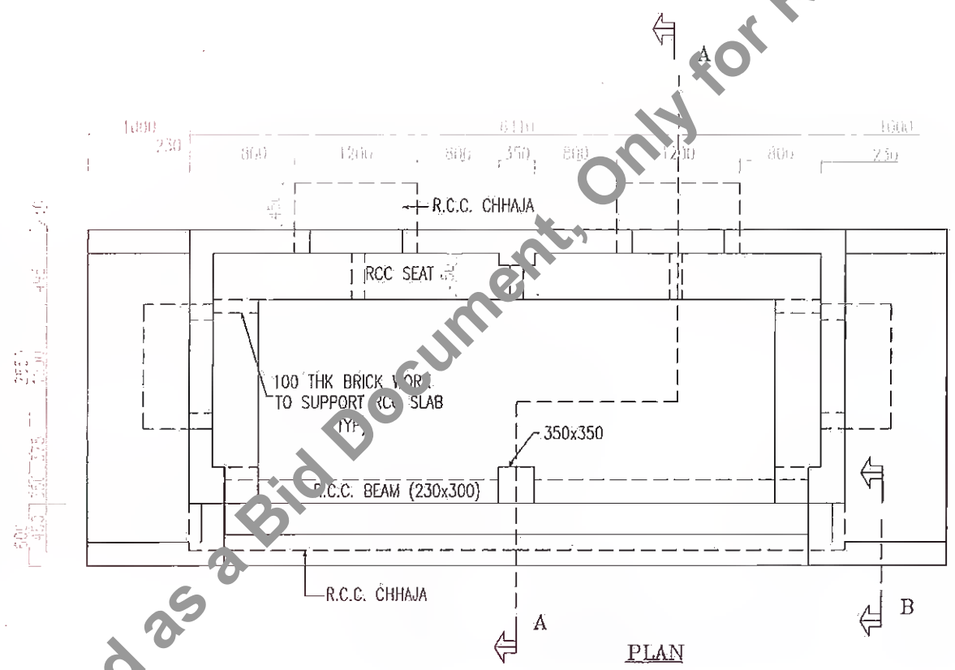

PLAN

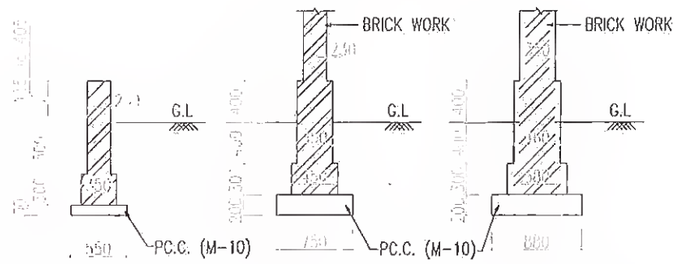

SECTION AT B-B FOOTING DETAIL-A FOOTING DETAIL-B

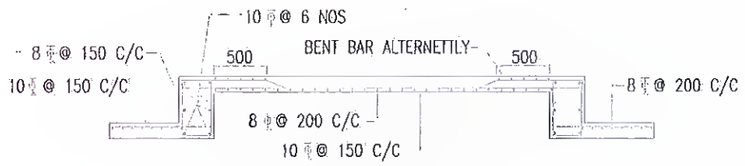

REINFORCEMENT DETAIL OF R.C.C Slab

NOTES:

1. ALL DIMENSIONS ARE IN MILIMETRES AND LEVELS ARE IN METRES UNLESS OTHERWISE SPECIFIED.
2. ONLY WRITTEN DIMENSIONS TO BE FOLLOWED.
3. BRICK WALLS ARE PLASTERED IN CEMENT MORTAR IN PROPORTION 1:3 (15mm THICK).
4. BUS SHELTERS ARE PAINTED WITH TWO COATS OF SNOWCEM.

Revision					
Rev.	Date	Description	Drawn	Checked	Approved

Client: Bihar State Road Devp. Corporation Ltd. (BSRDCL) — DGM (Tech) Bihar State Road Devp. Corporation Ltd. Patna

Project Title : CONSULTANCY SERVICES FOR PREPARATION OF DETAILED PROJECT REPORT (DPR) FOR SH-103 (MANGHWE- GOVINDPUR)

Consultant: HOLTEC CONSULTING PRIVATE LIMITED

Designed	Checked	Approved
VJ	JIG	JIG
Drawn	Scale	Date
SVR	NTS	DEC. - 2021

Title : TYPICAL BUS SHELTER

Drawing No. HOL/BSRDCL/DPR/13510/MISC/TBS — Rev. — Sheet 02

DG File Ref : — A3

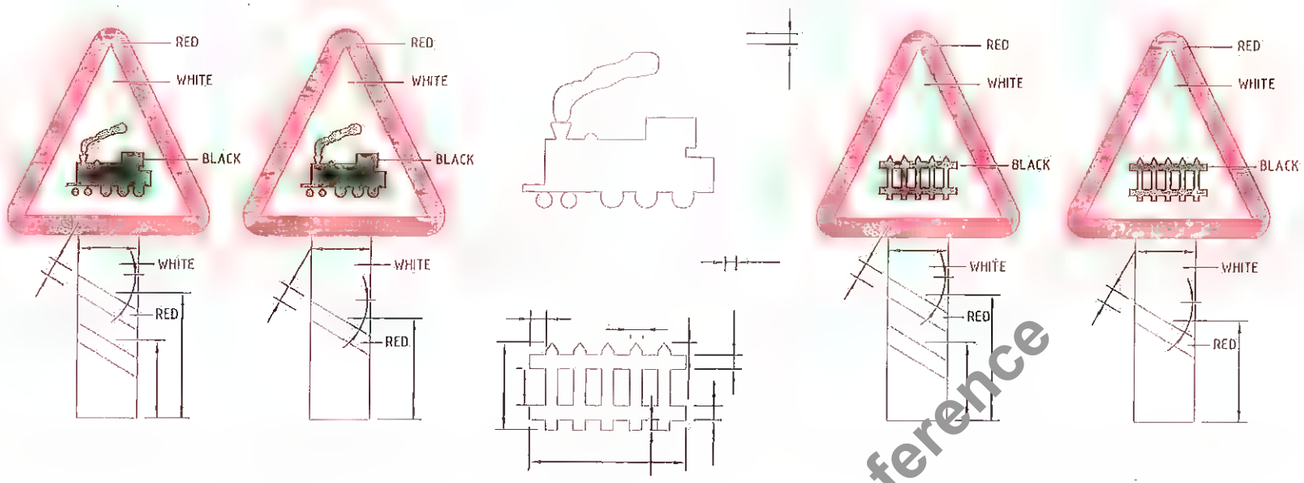

W6-UR

W6-GR

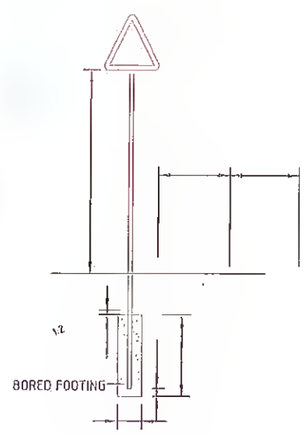

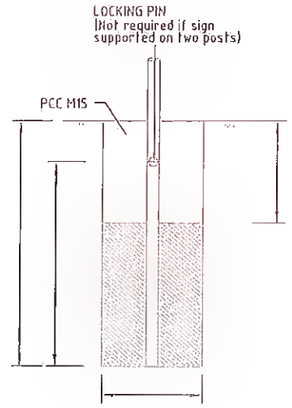

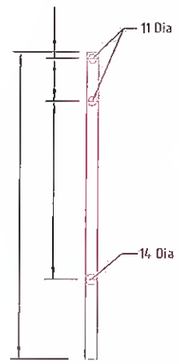

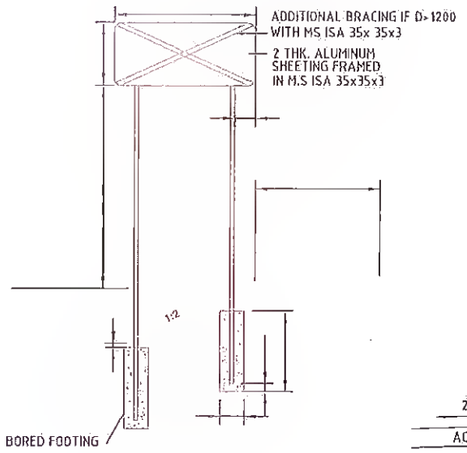

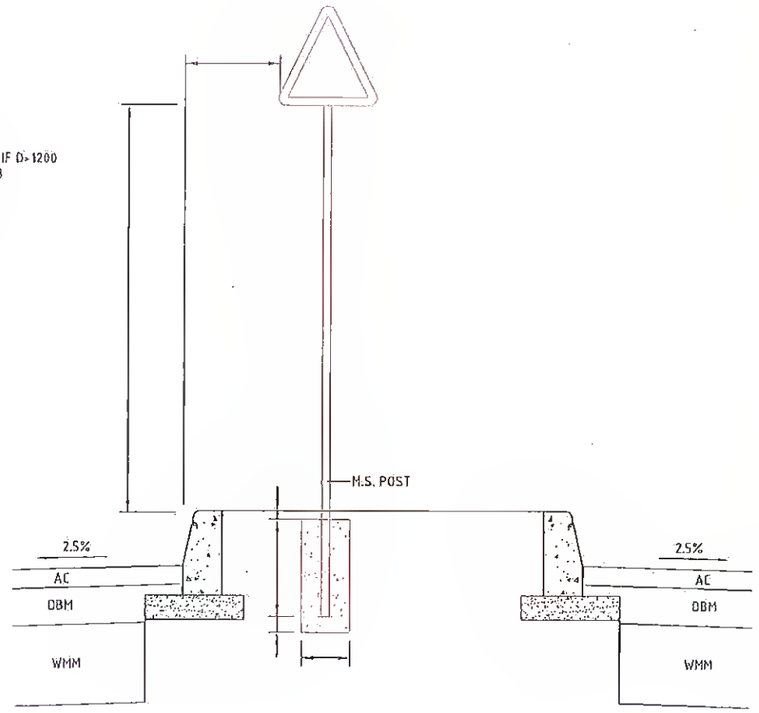

1. ALL THE DIMENSIONS ARE IN MILLIMETER UNLESS SPECIFIED.
2. RETROREFLECTORISED SHEETING SHALL BE CONFORMING TO ASTM D-4956-09/Type-IV
3. THE RETROREFLECTORIZED SHEETING AND MS ANGLE FOR POST SHALL BE IN ONE PIECE AND WITHOUT ANY JOINT.
4. THE SHEETING SHALL BE SECURELY BOLTED TO THE POST, THE REMAINING PORTION OF THE BOLT AFTER TIGHTENING THE NUT SHALL BE HAMMERED TO FORM RIVETING.
5. IN CASE OF ROAD SIGNS, IRON POST SHALL BE PAINTED WITH ONE COAT OF EPOXY PRIMER AND TWO COATS OF EPOXY FINISH PAINT HAVING BLACK AND WHITE BANDS OF 250MM WIDTH.
6. OBJECT MARKER SHALL BE SET BACK BY 500MM FROM THE FACE OF THE KERB. IT SHALL BE DRILLED INTO CONCRETE KERBS UPTO 600 MM DEPTH.
7. INDICATORS SHALL BE DIE CAST IN ALUMINUM, RESISTANT TO CORROSIVE EFFECT OF SILT AND GRIT, FITTED WITH LENS REFLECTORS.
8. ALL FOUNDATIONS SHALL BE IN M15 GRADE CEMENT CONCRETE.
9. HAZARD MARKERS SHALL BE PRESSED INTO GROUND.
10. BACK SIDE OF SIGN BOARD SHALL BE PAINTED WITH TWO COATS OF GRAY EPOXY PAINT.
11. ROAD SIGNS SHALL BE ERECTED AS PER SPECIFICATION OF IRC: 35-1997.

Revision					
Rev.	Date	Description	Drawn	Checked	Approved

Client:

MANAGER (TECH) DGM (Tech)
Bihar State Road Development Corporation Ltd.
Bihar State Road Devp. Corporation Ltd. Patna

Project Title :

CONSULTANCY SERVICES FOR PREPARATION OF DETAILED PROJECT REPORT (DPR) FOR SH-103 (MANGHWE- GOVINDPUR)

Consultant: HOLTEC CONSULTING PRIVATE LIMITED

Designed	Checked	Approved
VJ	JIG	JIG
Drawn	Scale	Date
SVR	NTS	DEC. - 2021

Title : TYPICAL DETAILS OF TRAFFIC SIGNS

Drawing No.	Rev.	Sheet
HOL/BSRDCL/DFR/13510/MISC/TS		07

On the Fol : A3

CAUTIONARY/WARNING SIGNS

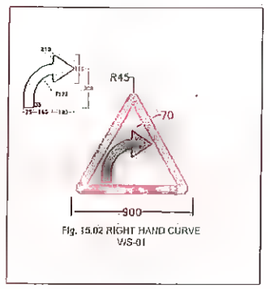

Fig. 15.02 RIGHT HAND CURVE
WS-01

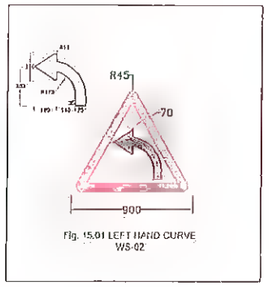

Fig. 15.01 LEFT HAND CURVE
WS-02

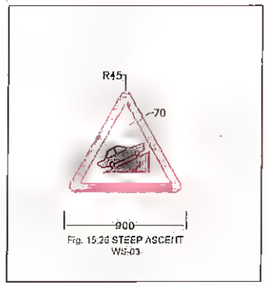

Fig. 15.26 STEEP ASCENT
WS-03

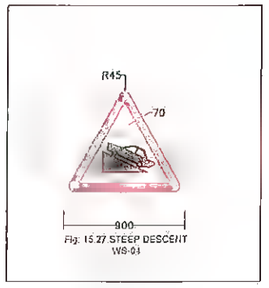

Fig. 15.27 STEEP DESCENT
WS-04

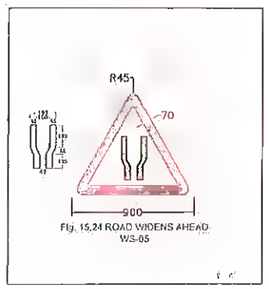

Fig. 15.24 ROAD WIDENS AHEAD
WS-05

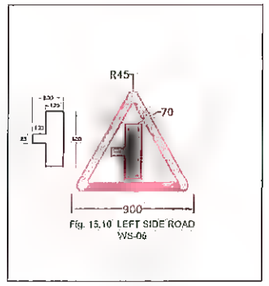

Fig. 15.10 LEFT SIDE ROAD
WS-06

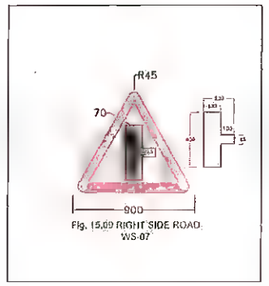

Fig. 15.09 RIGHT SIDE ROAD
WS-07

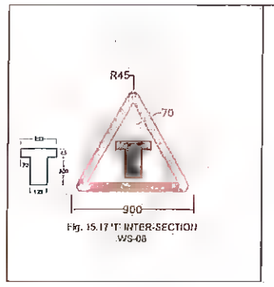

Fig. 15.17 'T' INTER-SECTION
WS-08

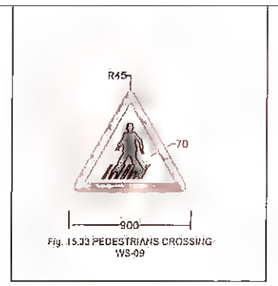

Fig. 15.33 PEDESTRIANS CROSSING
WS-09

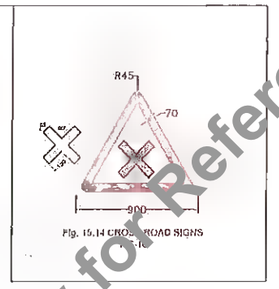

Fig. 15.14 CROSS ROAD SIGNS
WS-10

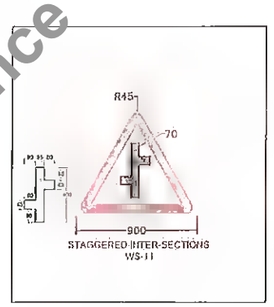

STAGGERED INTER-SECTIONS
WS-11

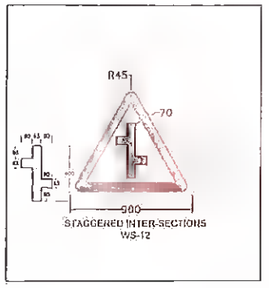

STAGGERED INTER-SECTIONS
WS-12

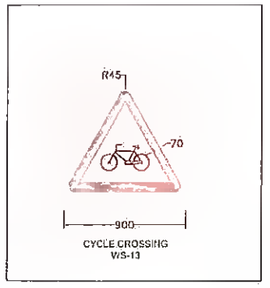

CYCLE CROSSING
WS-13

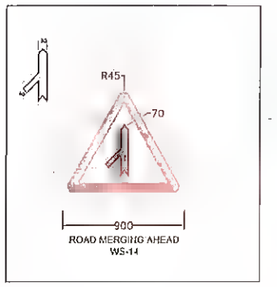

ROAD MERGING AHEAD
WS-14

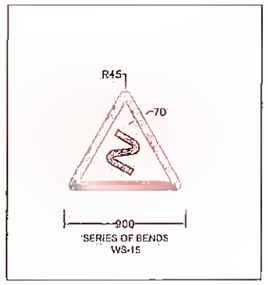

SERIES OF BENDS
WS-15

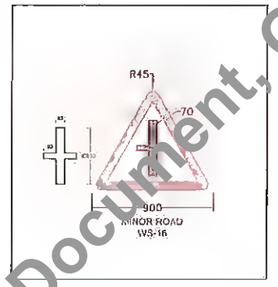

MINOR ROAD
WS-16

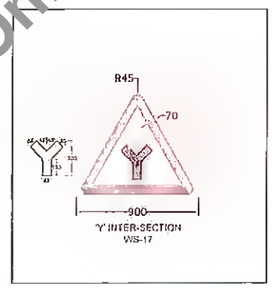

'Y' INTER-SECTION
WS-17

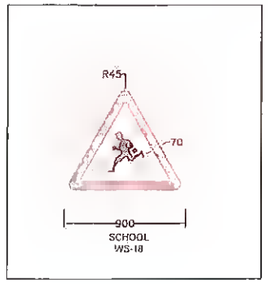

SCHOOL
WS-18

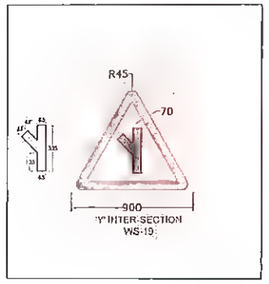

'Y' INTER-SECTION
WS-19

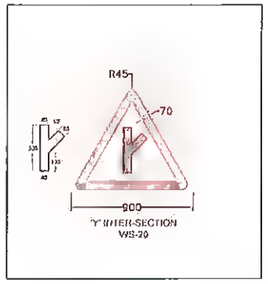

'Y' INTER-SECTION
WS-20

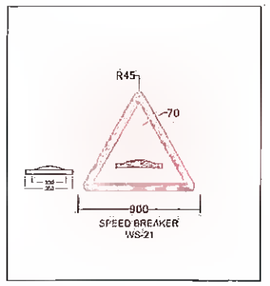

SPEED BREAKER
WS-21

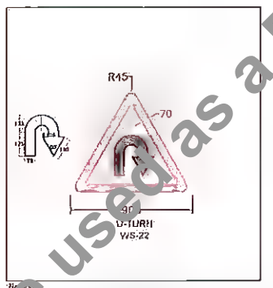

U-TURN
WS-22

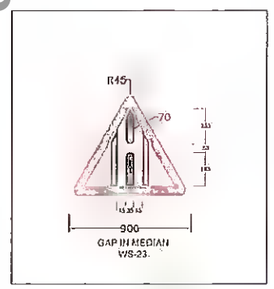

GAP IN MEDIAN
WS-23

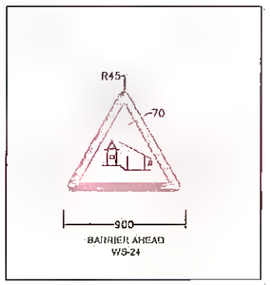

BARRIER AHEAD
WS-24

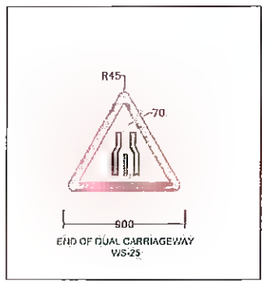

END OF DUAL CARRIAGEWAY
WS-25

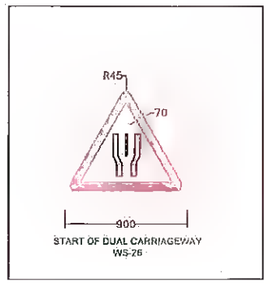

START OF DUAL CARRIAGEWAY
WS-26

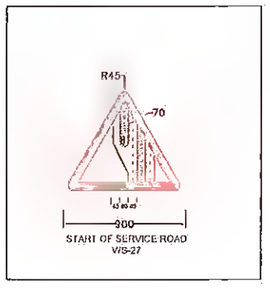

START OF SERVICE ROAD
WS-27

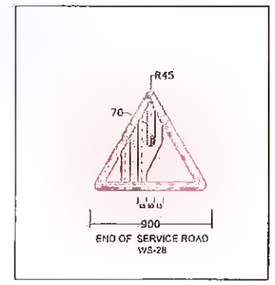

END OF SERVICE ROAD
WS-28

Notes:
1. ALL THE DIMENSIONS ARE IN MILLIMETER UNLESS SPECIFIED.
2. THE HIGHREFLECTORISED SHEETING SHALL BE CONFORMING TO ASTM D-4956-89/ TYPE-IV
3. REFER TYPE DESIGNS FOR INTERSECTIONS (NATIONAL HIGHWAYS (NHAI)) 1995.
4. ROAD SIGN SHALL BE ERECTED AS PER SPECIFICATION OF IRC: 67

Revision					
Rev.	Date	Description	Drawn	Checked	Approved

Client:

Bihar State Road Development Corporation Limited

Project Title : CONSULTANCY SERVICES FOR PREPARATION OF DETAILED PROJECT REPORT (DPR) FOR SH-103 (MANGHWE- GOVINDPUR)

Consultant: HOLTEC CONSULTING PRIVATE LIMITED

Designed	Checked	Approved
YJ	JIG	JIG
Drawn	Scale	Date
SVH	NTS	DEC. - 2021

Title : TYPICAL DETAILS OF TRAFFIC SIGNS (CAUTIONARY/WARNING SIGNS.)

Drawing No. HOL/BSRDCL/DPR/13510/MISC/CWS | Rev. | Sheet 01

CAD File Ref : | A3

MANDATORY/REGULATORY SIGNS

STOP SIGNS
FOR CENTRAL ISLAND STOP SINGH
SIZE SHALL BE OF 600mm
S-01

COMPULSORY DIRECTION CONTROL
AND OTHER SIGNS

COMPULSORY
KEEP LEFT
S-02

GIVE WAY SIGNS
MS-02

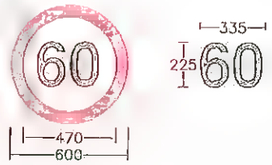

SPEED LIMIT
M-2

SPEED LIMIT END

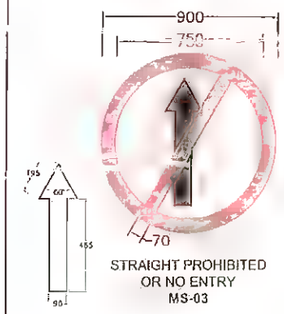

STRAIGHT PROHIBITED
OR NO ENTRY
MS-03

NO ENTRY
MS-04

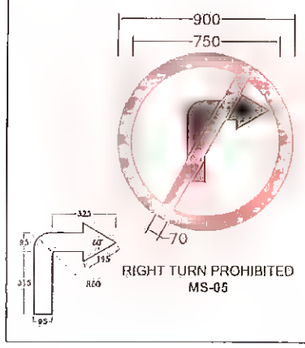

RIGHT TURN PROHIBITED
MS-05

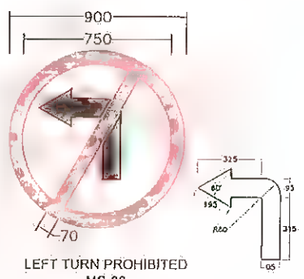

LEFT TURN PROHIBITED
MS-06

U-TURN PROHIBITED
MS-07

COMPULSORY
SOUND HORN
MS-08

HORN PROHIBITED
MS-09

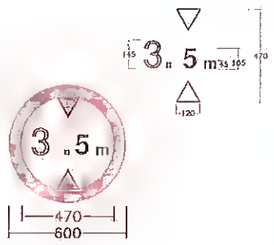

HEIGHT LIMIT
MS-10

LENGTH LIMIT
MS-11

SPEED LIMIT END
MS-12

1. ALL THE DIMENSIONS ARE IN MILLIMETER UNLESS SPECIFIED
2. RETROREFLECTORISED SHEETING SHALL BE CONFORMING TO ASTM D-4956-09/ TYPE-IV
3. ROAD SIGN SHALL BE ERECTED AS PER SPECIFICATION OF IRC: 67

Revision					
Rev.	Date:	Description	Drawn	Checked	Approved

Client:
MANAGER (TECH)
Bihar State Road Development Corporation Ltd.
Patna

Project Title :
CONSULTANCY SERVICES FOR PREPARATION OF DETAILED PROJECT REPORT (DPR) FOR SH-103 (MANGHWE- GOVINDPUR)

Consultant:
HOLTEC CONSULTING PRIVATE LIMITED

Designed	Checked	Approved
YJ	JIG	JIG
Drawn: SVR	Scale: NTS	Date: DEC. - 2021

Title :
TYPICAL DETAILS OF TRAFFIC SIGNS
(MANDATORY/REGULATORY SIGNS)

Drawing No. HOL/BSRDCL/DPR/13510/MISC/MRS | Rev. | Sheet 02
DB File Ref : | A3

INFORMATORY SIGN BOARD:-

FACILITY INFORMATION SIGNS

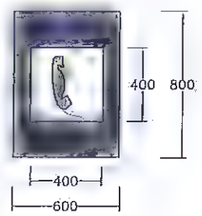

PUBLIC TELEPHONE
OIS-01

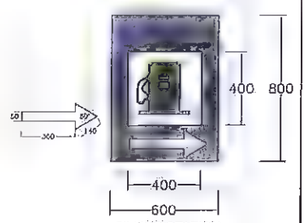

FILLING STATION
IS-16

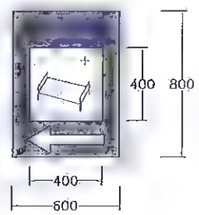

HOSPITAL
OIS-03

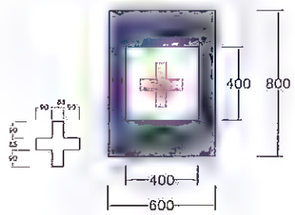

FIRST-AID POST
OIS-04

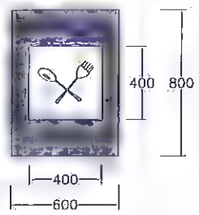

EATING PLACE
IS-05

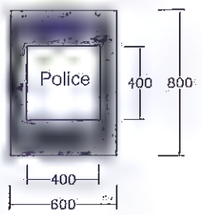

POLICE STATION
IS-20

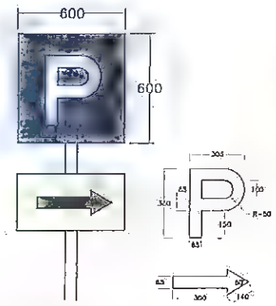

PARKING THIS SIDE
OIS-07

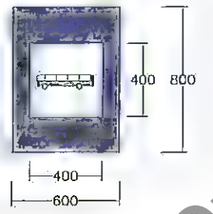

BUS STOP
OIS-08

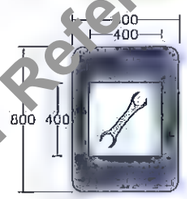

REPAIR FACILITY
IS-19

(B) DIRECTION AND PLACE IDENTIFICATION SIGNS

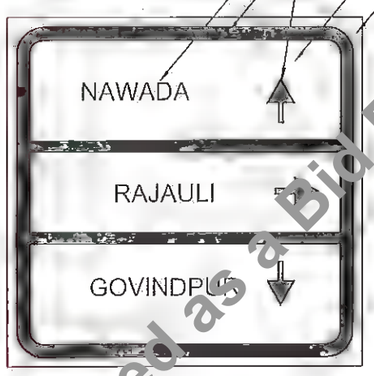

ADVANCE DIRECTION / DESTINA SIGN
IS-01

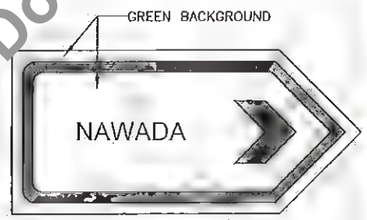

DIRECTION SIGN
IS-02

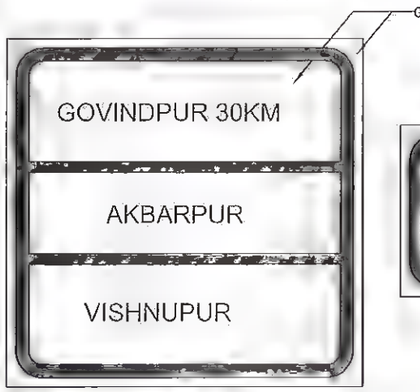

REASSURANCE SIGN
IS-03

PLACE IDENTIFICATION SIGN
IS-04

TRUCK LAY BYE
IS-05

TOLL BOOTH AHEAD
IS-06

1. ALL THE DIMENSIONS ARE IN MILLIMETER UNLESS SPECIFIED
2. RETROREFLECTORISED SHEETING SHALL BE CONFORMING TO ASTM D-4956-09/ TYPE-IV
3. THE SIGN SHALL BE ERECTED AS PER SPECIFICATION OF IRC-67

Revision					
Rev.	Date	Description	Drawn	Checked	Approved

Client: LEGEND

MANAGING DIRECTOR
Bihar State Road Development Corporation Ltd.
Nawada

DGM (TC)
Bihar State Road Devp. Corp.

Project Title : Client:
CONSULTANCY SERVICES FOR PREPARATION OF DETAILED PROJECT REPORT (DPR) FOR SH-103 (MANGHWE- GOVINDPUR)

Consultant: HOLTEC CONSULTING PRIVATE LIMITED

Designed	Checked	Approved
YJ	JIG	JIG
Drawn	Scale	Date
SVR	NTS	DEC. - 2021

Title : TYPICAL DETAILS OF TRAFFIC SIGNS (FACILITY INFORMATION SIGNS)

Drawing No. HOL/BSRDCL/DPR/13510/MISC/FIS | Rev. | Sheet 03

CAD File Ref : | A3

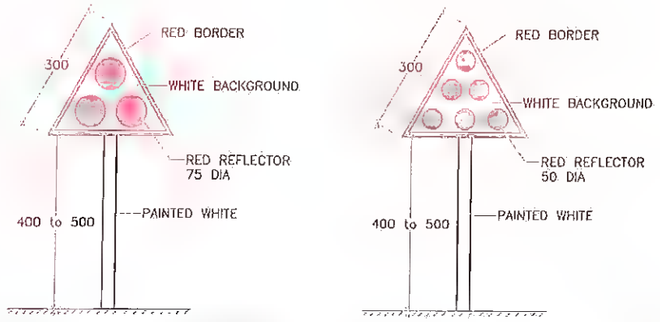

CLUSTER OF RED REFLECTORS TA-1

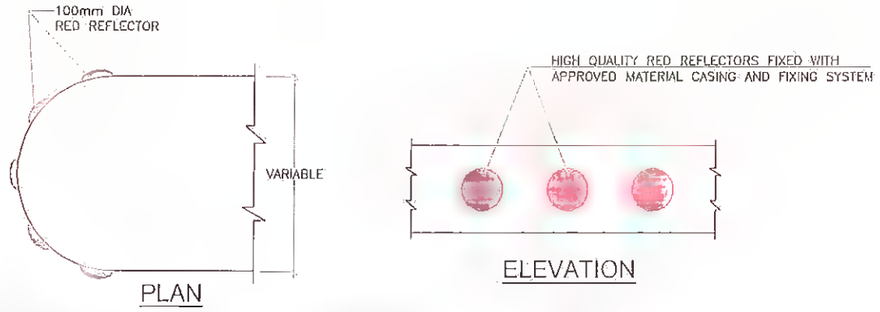

MEDIAN TIP REFLECTORS TA-2

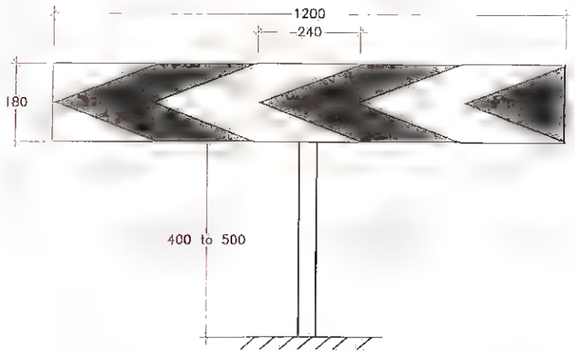

ONE-WAY HAZARD MARKER TA-3

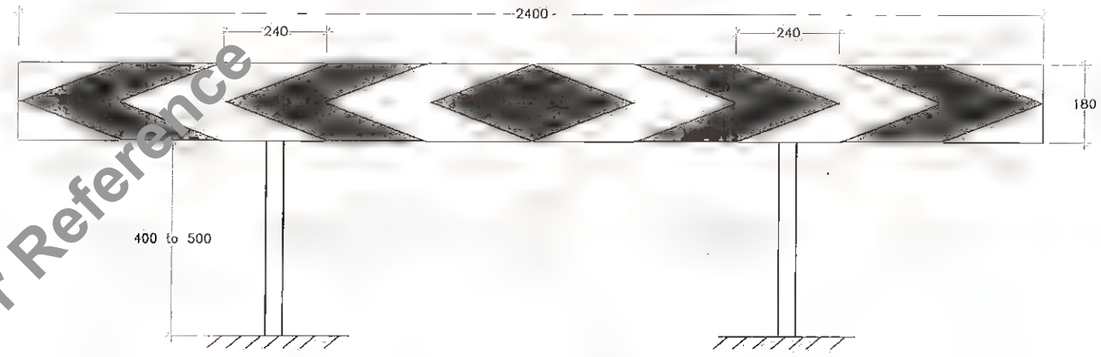

TWO-WAY HAZARD MARKER TA-3A

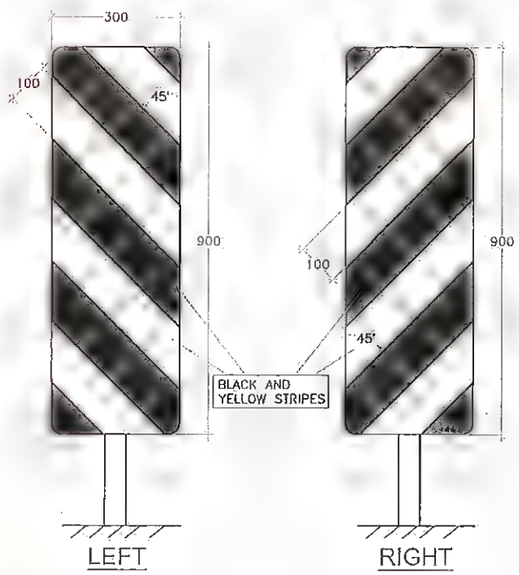

OBJECT HAZARD MARKERS MS-14

NOTE:–
1. ALL DIMENSION ARE IN MM. UNLESS OTHERWISE MENTIONED.

Revision					
Rev.	Date	Description	Drawn	Checked	Approved

Client: Bihar State Road Dev. Corporation Ltd. Patna

Project Title : CONSULTANCY SERVICES FOR PREPARATION OF DETAILED PROJECT REPORT (DPR) FOR SH-103 (MANGHWE- GOVINDPUR)

Consultant: HOLTEC CONSULTING PRIVATE LIMITED

Designed	Checked	Approved
VJ	JIG	JIG
Drawn	Scale	Date
SVR	NTS	DEC. - 2021

Title : TYPICAL DETAILS OF TRAFFIC SIGNS (CLUSTER OF RED REFLECTORS)

Drawing No. HOL/BSRDCL/DPR/13510/MISC/CRR | Rev. | Sheet 06

Job File Ref : | A3

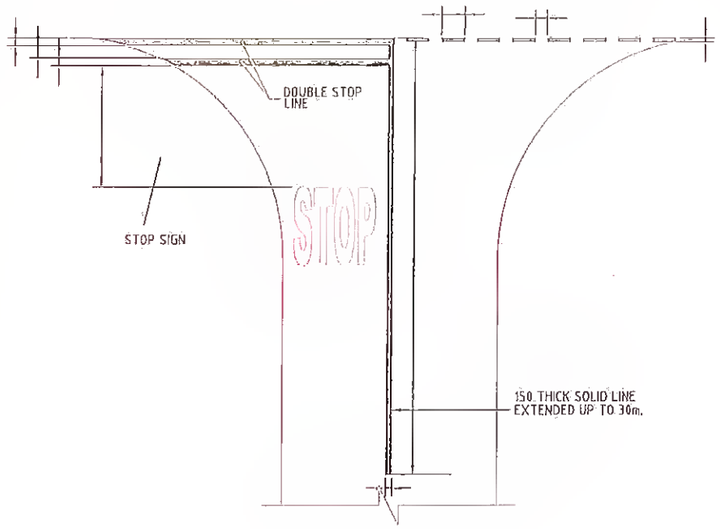

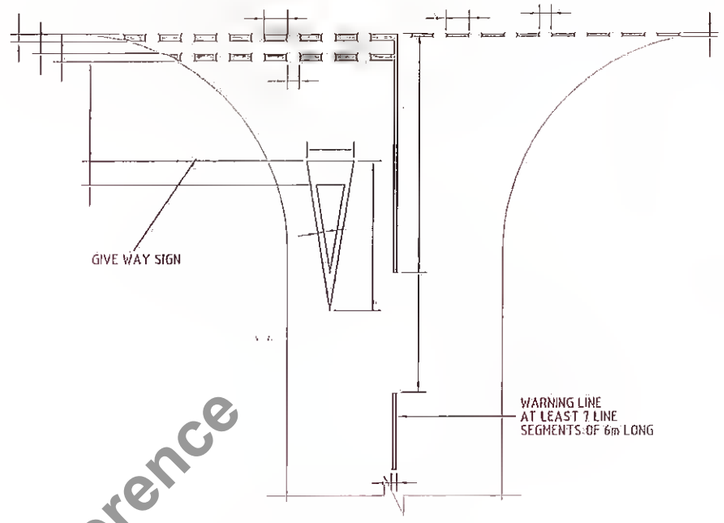

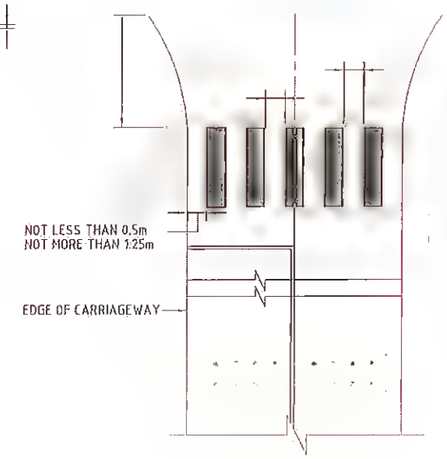

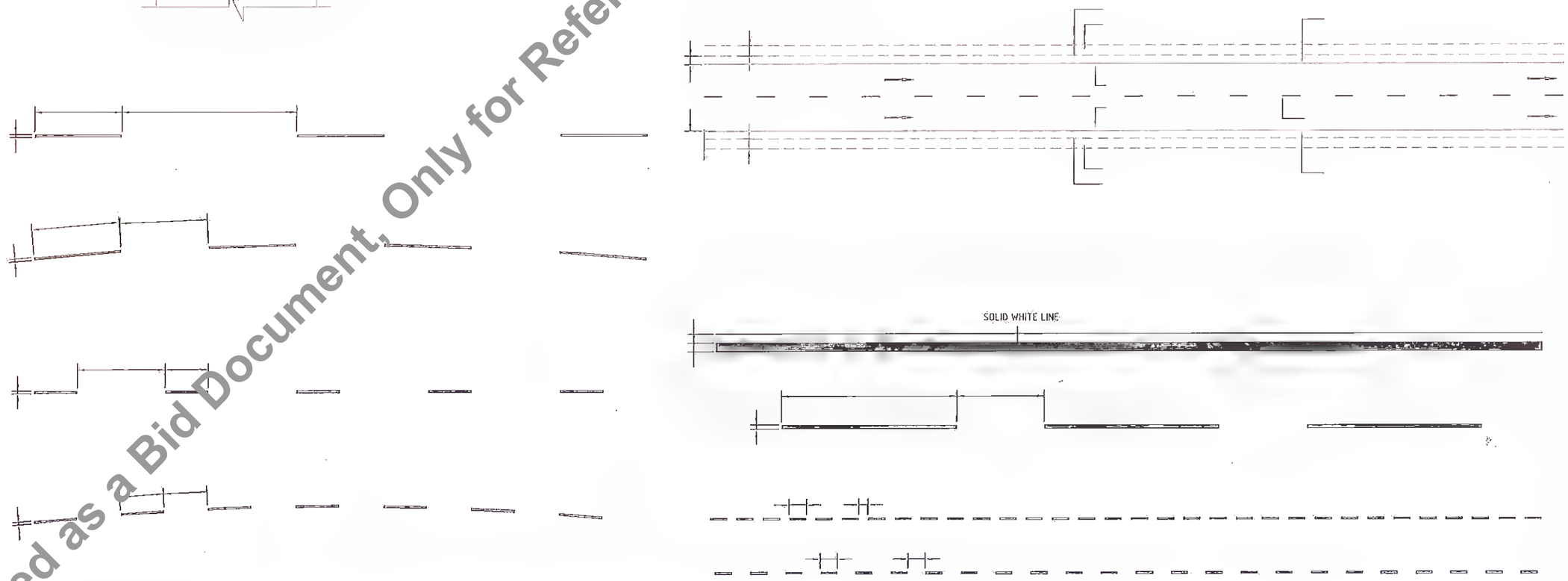

1. ROAD MARKING SHALL BE OF HOT APPLIED THERMOPLASTIC MATERIALS WITH GLASS REFLECTORISING BEADS OF TYPE 2 AS PER CLAUSES OF SECTION 803 OF MOSRTH SPECIFICATIONS.
2. ROAD MARKING ARE GENERALLY BESED ON IRC:35-1997.

Revision					
Rev.	Date	Description	Drawn	Checked	Approved

Client: Bihar State Road Development Corporation Ltd., Nawada

DGM (Tech) Bihar State Road Dev. Corp. Ltd. Nawada

Project Title : CONSULTANCY SERVICES FOR PREPARATION OF DETAILED PROJECT REPORT (DPR) FOR SH-103 (MANGHWE- GOVINDPUR)

Consultant: HOLTEC CONSULTING PRIVATE LIMITED

Designed	Checked	Approved
YJ	JIG	JIG
Drawn: SVR	Scale: NTS	Date: DEC. - 2021

Title : TYPICAL DETAILS OF ROAD MARKING

Drawing No: HCL/BSRDCL/DPR/13510/MISC/RM | Rev. | Sheet 04

CAD File Ref : | A3

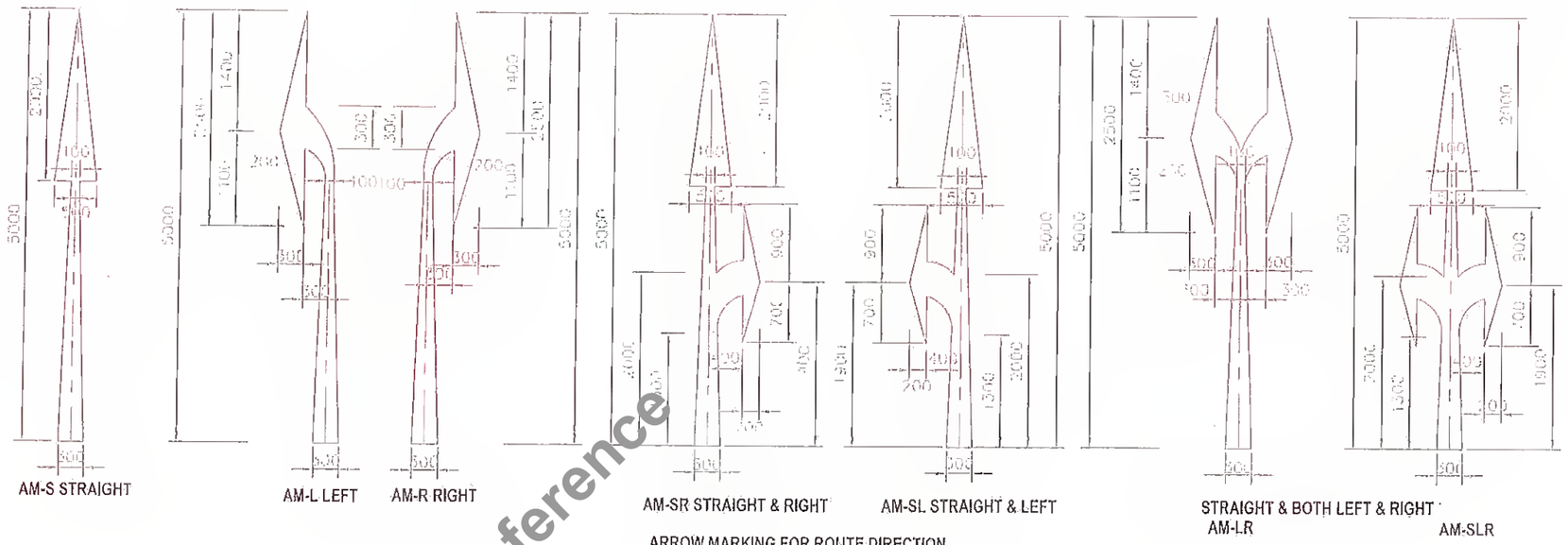

ARROW MARKING FOR ROUTE DIRECTION

NOTE: FOR SPEED UPTO 50KMS PER HOUR THE ARROWS SHOULD BE 3.5M IN LENGTH. FOR HIGHER SPEEDS, THE LENGTH SHOULD BE 5M.

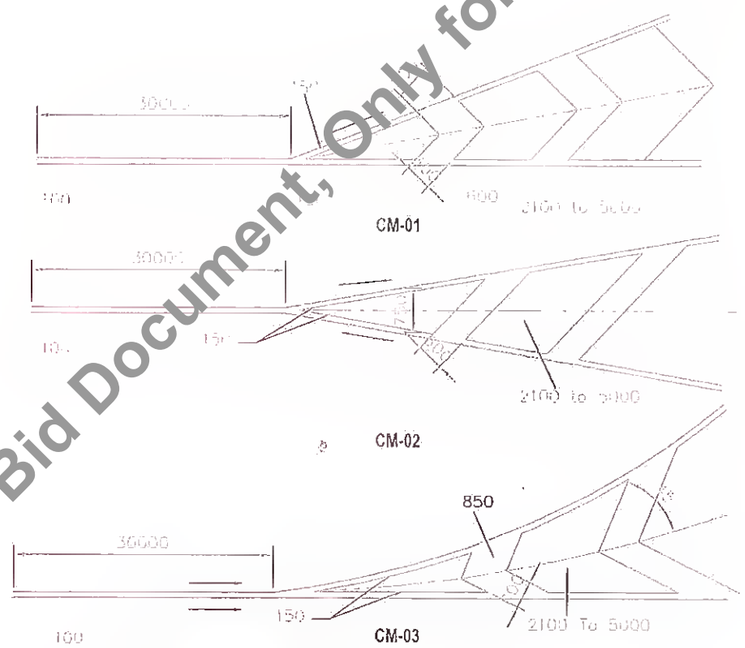

DETAILS OF DIAGONAL AND CHEVRON MARKING

Notes :

1. ROAD MARKING SHALL BE OF HOT APPLIED THERMOPLASTIC MATERIALS WITH GLASS REFLECTORISING BEADS OF TYPE 2 AS PER CLAUSES OF SECTION 803 OF MOSRTH SPECIFICATIONS.
2. ROAD MARKING ARE GENERALLY BESED ON IRC: 35–1997.

Revision					
Rev.	Date	Description	Drawn	Checked	Approved

Client: MANAGER (TECH) DGM (Tech) Bihar State Road Dev. Corporation Ltd. Bihar State Road Devp. Corporation Ltd. Patna

Project Title : CONSULTANCY SERVICES FOR PREPARATION OF DETAILED PROJECT REPORT (DPR) FOR SH-103 (MANGHWE- GOVINDPUR)

Consultant: HOLTEC CONSULTING PRIVATE LIMITED

Designed	Checked	Approved
YJ	JIG	JIG
Drawn	Scale	Date
SVR	NTS	DEC.- 2021

Title : TYPICAL DETAILS OF CHEVRON & ARROW MARKING FOR ROUTE DIRECTION MARKING

Drawing No. HOL/BSRDCL/DPR/13510/MISC/ROM | Rev. | Sheet 05 | A3

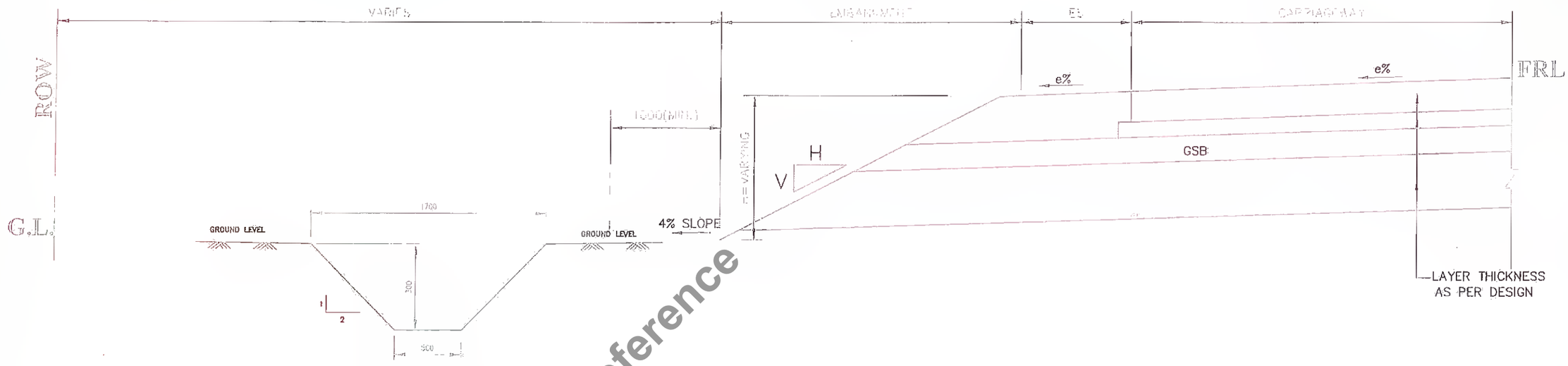

EARTHEN DRAIN

UNLINED DRAIN

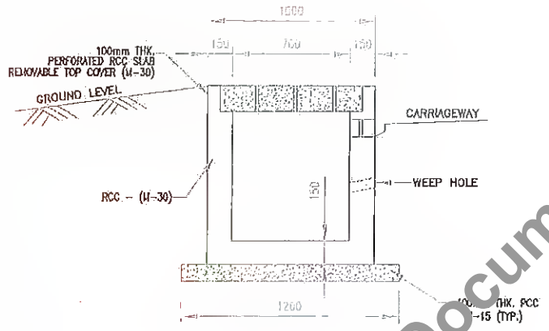

DRAIN IN BUILT-UP AREA

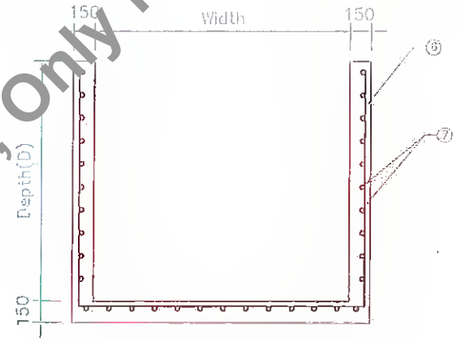

TYPICAL DETAIL OF DRAIN
(TYPE- A)

SCHEDULE OF REINFORCEMENT

DRAIN TYPE	DRAIN DEPTH(D)	BAR TYPE ⑥	BAR TYPE ⑦
PRE CAST	UP TO 1000mm	8ϕ @ 200 C/C	8ϕ @ 220 C/C
	1250mm	8ϕ @ 160 C/C	8ϕ @ 220 C/C
	1500mm	8ϕ @ 110 C/C	8ϕ @ 220 C/C
CAST IN SITU	UP TO 1000mm	8ϕ @ 200 C/C	8ϕ @ 220 C/C
	1250mm	8ϕ @ 150 C/C	8ϕ @ 220 C/C
	1500mm	8ϕ @ 105 C/C	8ϕ @ 220 C/C

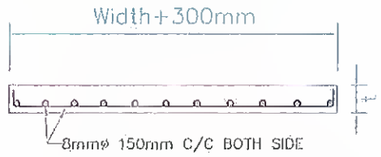

TYPICAL DETAILS OF PRE-CAST SLAB

DIMENSION DETAIL OF PRE-CAST SLAB

SL.NO.	LENGTH (MM)	WIDTH+300mm (MM)	THICKNESS (t) (MM)
1	1000	UP TO 1500	100

NOTES:–

1. ALL DIMENSION ARE IN MM. AND UNLESS OTHERWISE SPECIFIED.
2. GRADE OF CONCRETE–M30. UNLESS OTHERWISE MENTIONED
3. THE REINFORCEMENT STEEL SHALL BE OF TMT H.Y.S.D BARS (GRADE DESIGNATION Fe–500)
4. CLEAR COVER – 20mm

GL – FINISHED GROUND LEVEL.
FRL – FINISHED ROAD LEVEL.

Revision					
Rev.	Date	Description	Drawn	Checked	Approved

Client: Bihar State Road Development Corporation Ltd. Nawada

Project Title : CONSULTANCY SERVICES FOR PREPARATION OF DETAILED PROJECT REPORT (DPR) FOR SH-103 (MANGHWE- GOVINDPUR)

Consultant: HOLTEC CONSULTING PRIVATE LIMITED

Designed	Checked	Approved
AS	JIG	JIG
Drawn: SRD	Scale: NTS	Date: MAY.-2017

Title : TYPICAL DETAIL OF UNLINED & RCC RECTANGULAR DRAIN

Drawing No. HOL/BSRDCL/DPR/13510/MISC/DRAIN | Rev. | Sheet 01 | A3

SIGNAGE PLAN

Revision					
Rev.	Date:	Description	Drawn	Checked	Approved

Client: MANAGER (TECH) Bihar State Road Dev. Corp. Ltd. Bihar State Road Development Corporation Ltd. Nawada — DGM (Tech) Bihar State Road Devp. Corp. Ltd. Nawada

Project Title : CONSULTANCY SERVICES FOR PREPARATION OF DETAILED PROJECT REPORT (DPR) FOR SH-103 (MANGHWE- GOVINDPUR)

Consultant: HOLTEC CONSULTING PRIVATE LIMITED

Designed	Checked	Approved
GBK	SM	JIG
Drawn GBK	Scale NTS	Date APRIL - 2014

Title : SIGNAGE PLAN SH-103 (MANGHWE - GOVINDPUR) (AT CH.- 21+000 TO 22+000)

Drawing No. HOL/BSRDCL/DPR/13510/SP | Rev. 0 | Sheet 22

CAD file Ref : | A3

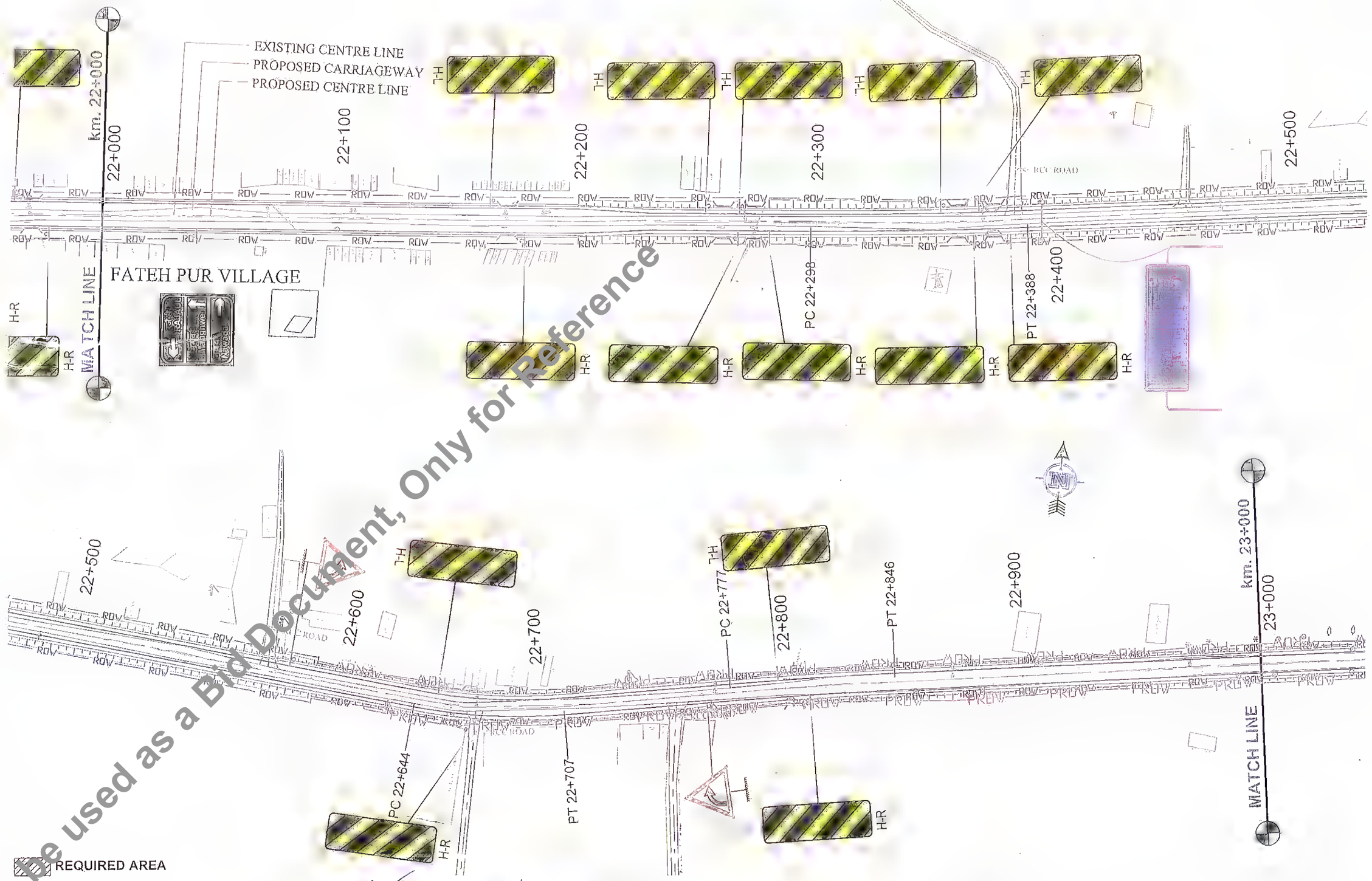

Revision					
Rev.	Date	Description	Drawn	Checked	Approved

Client:

MANAGER (TECH) DGM (Tech)
Bihar State Roads Development Corporation Ltd. Patna

Project Title :

CONSULTANCY SERVICES FOR PREPARATION OF DETAILED PROJECT REPORT (DPR) FOR SH-103 (MANGHWE- GOVINDPUR)

Consultant: HOLTEC CONSULTING PRIVATE LIMITED

Designed	Checked	Approved
GBK	SM	JIG
Drawn: GBK	Scale: NTS	Date: APRIL - 2014

Title : SIGNAGE PLAN
SH-103 (MANGHWE - GOVINDPUR)
(AT CH.- 22+000 TO 23+000)

Drawing No. HOL/BSRDCL/DPR/13510/SP | Rev. 0 | Sheet 23

CAD File Ref : | A3

Revision					
Rev.	Date	Description	Drawn	Checked	Approved

Client: Bihar State Road Development Corporation Ltd. Nawada

Project Title : CONSULTANCY SERVICES FOR PREPARATION OF DETAILED PROJECT REPORT (DPR) FOR SH-103 (MANGHWE- GOVINDPUR)

Consultant: HOLTEC CONSULTING PRIVATE LIMITED

Designed	Checked	Approved
GBK	SM	JIG
Drawn: GBK	Scale: NTS	Date: APRIL - 2014

Title : SIGNAGE PLAN SH-103 (MANGHWE - GOVINDPUR) (AT CH.- 23+000 TO 24+000)

Drawing No. HOL/BSRDCL/DPR/13510/SP | Rev. 0 | Sheet 24

CAD File Ref : | A3

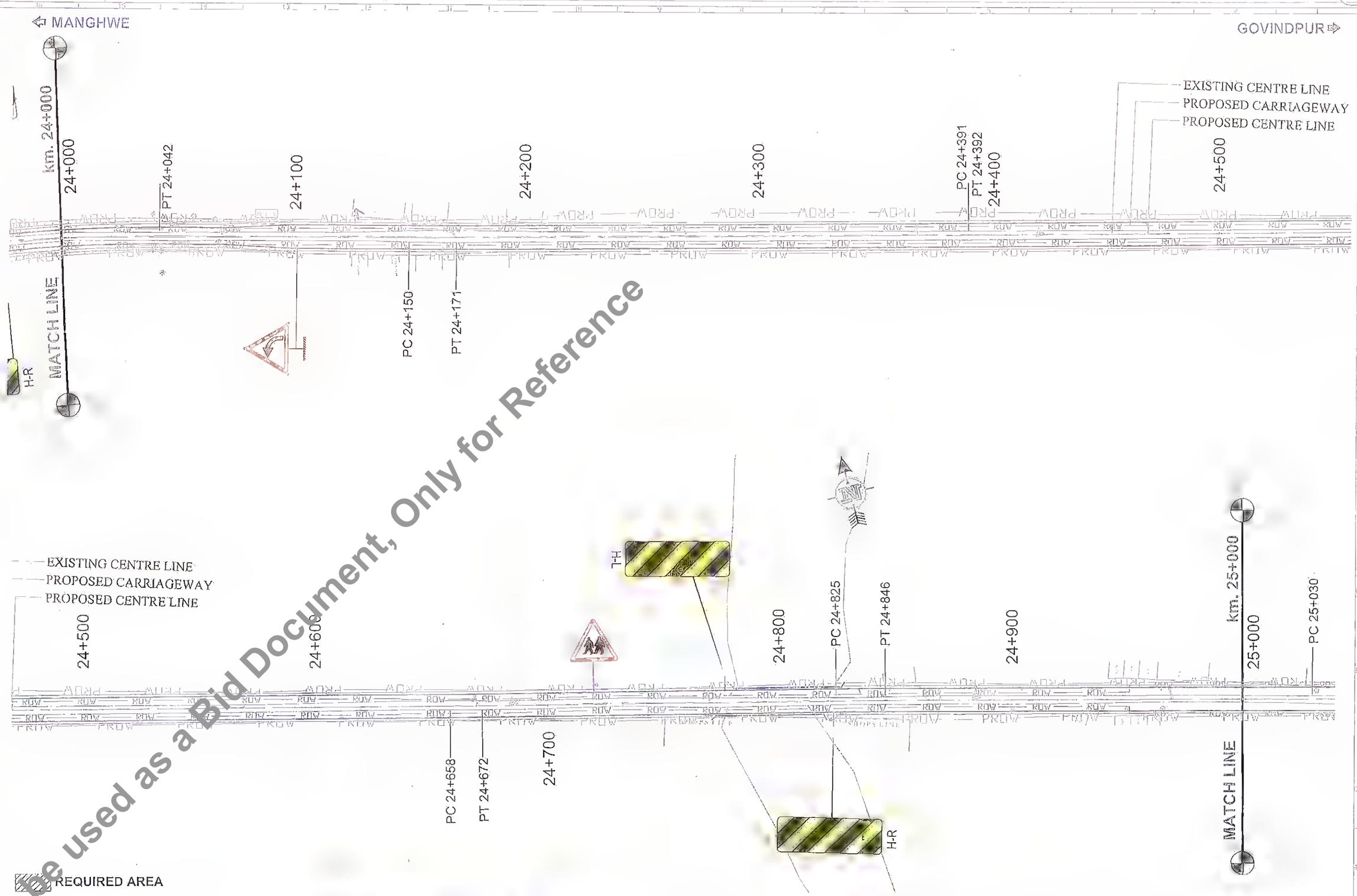

Revision					
Rev.	Date:	Description	Drawn	Checked	Approved

Client: Bihar State Road Development Corporation Ltd.

Project Title : CONSULTANCY SERVICES FOR PREPARATION OF DETAILED PROJECT REPORT (DPR) FOR SH-103 (MANGHWE- GOVINDPUR)

Consultant: HOLTEC CONSULTING PRIVATE LIMITED

Designed	Checked	Approved
GBK	SM	JIG
Drawn: GBK	Scale: NTS	Date: APRIL - 2014

Title : SIGNAGE PLAN SH-103 (MANGHWE - GOVINDPUR) (AT CH.- 24+000 TO 25+000)

Drawing No: HOL/BSRDCL/DPR/13510/SP | Rev. 0 | Sheet 25

CAD File Ref : | A3

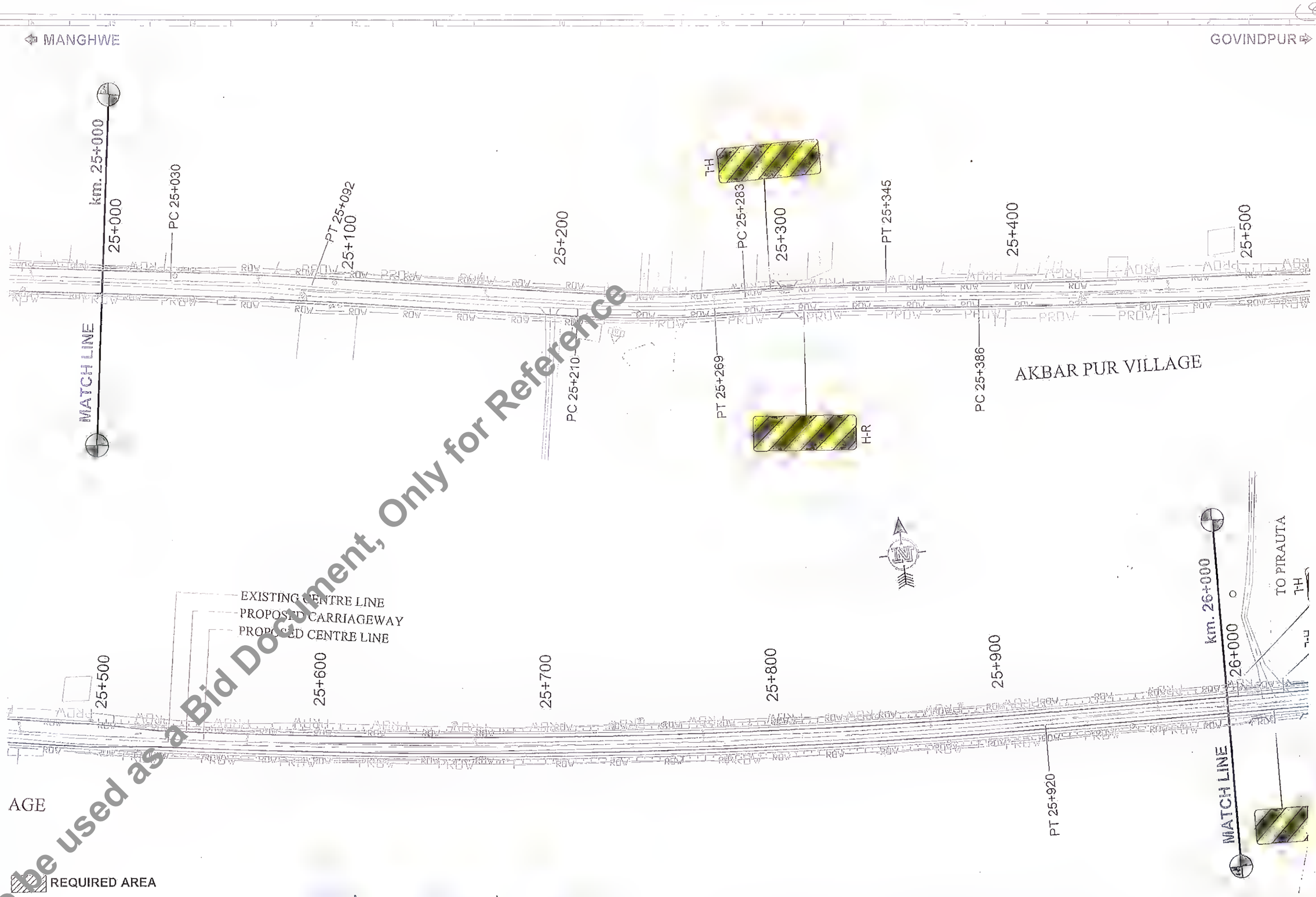

Revision					
Rev.	Date:	Description	Drawn	Checked	Approved

Client:

MANAGING DIRECTOR
Bihar State Road Devp. Corp. Ltd.
Bihar State Bridge Development Co. Ltd.
Patna, Nawada

DGM (Tech)

Project Title :

CONSULTANCY SERVICES FOR PREPARATION OF DETAILED PROJECT REPORT (DPR) FOR SH-103 (MANGHWE- GOVINDPUR)

Consultant: HOLTEC CONSULTING PRIVATE LIMITED

Designed	Checked	Approved
GBK	SM	JIG
Drawn	Scale	Date
GBK	NTS	APRIL - 2014

CAD File Ref :

Title : SIGNAGE PLAN
SH-103 (MANGHWE - GOVINDPUR)
(AT CH.- 25+000 TO 26+000)

Drawing No. HOL/BSRDCL/DPR/13510/SP | Rev. 0 | Sheet 26 | A3

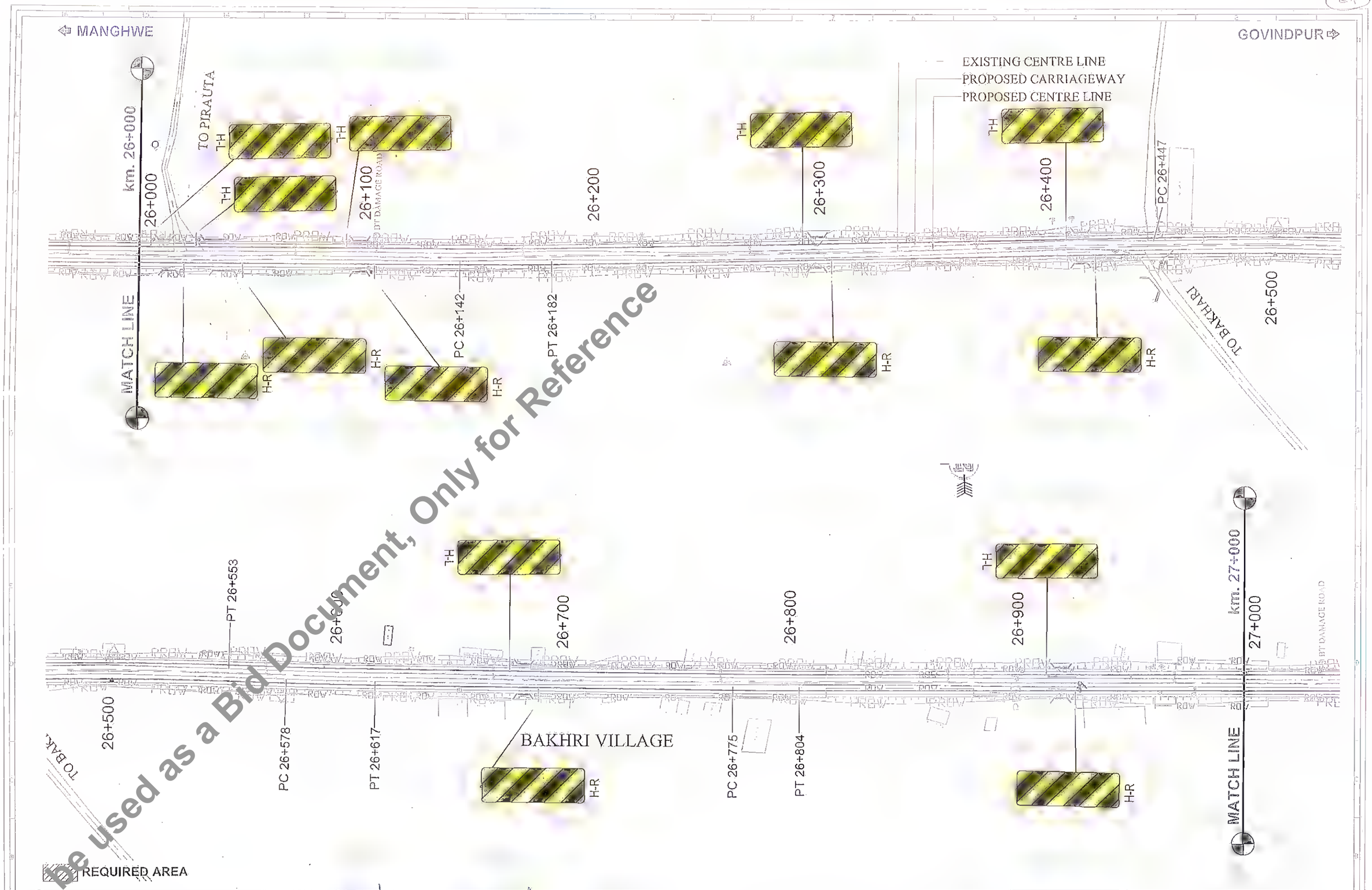

Revision					
Rev.	Date	Description	Drawn	Checked	Approved

Client: Bihar State Bridge Road Devp. Corporation Ltd. PIU, Nawada

Project Title : CONSULTANCY SERVICES FOR PREPARATION OF DETAILED PROJECT REPORT (DPR) FOR SH-103 (MANGHWE- GOVINDPUR)

Consultant: HOLTEC CONSULTING PRIVATE LIMITED

Designed	Checked	Approved
GBK	SM	JIG
Drawn	Scale	Date
GBK	NTS	APRIL - 2014

Title : SIGNAGE PLAN SH-103 (MANGHWE - GOVINDPUR) (AT CH.- 26+000 TO 27+000)

Drawing No. HOL/BSRDCL/DPR/13510/SP | Rev. 0 | Sheet 27

CAD File Ref : | A3

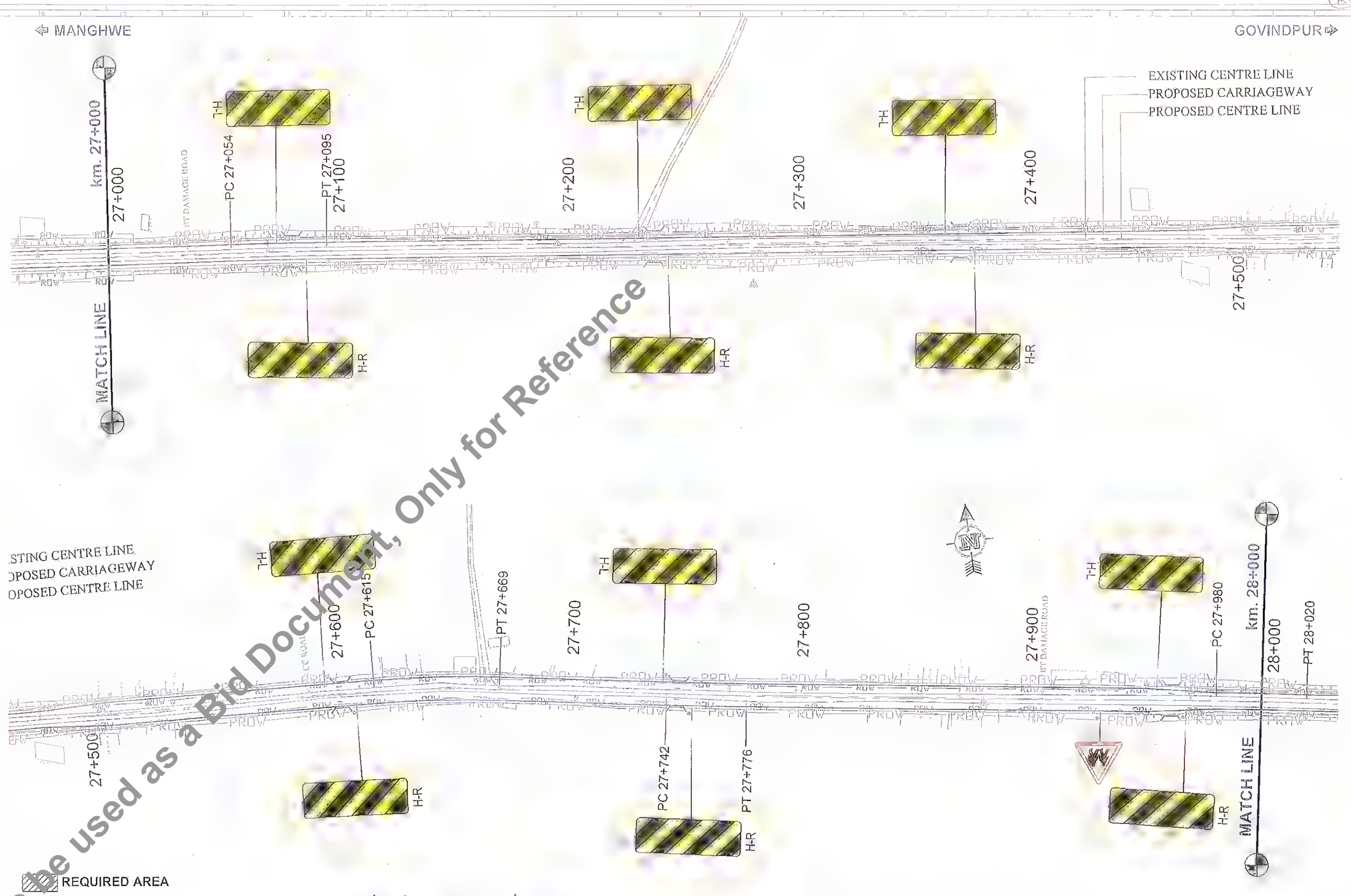

Revision					
Rev.	Date	Description	Drawn	Checked	Approved

Client: Bihar State Road Development Corporation Ltd, Nawada

Project Title : CONSULTANCY SERVICES FOR PREPARATION OF DETAILED PROJECT REPORT (DPR) FOR SH-103 (MANGHWE- GOVINDPUR)

Consultant: HOLTEC CONSULTING PRIVATE LIMITED

Designed	Checked	Approved
GBK	SM	JIG
Drawn: GBK	Scale: NTS	Date: APRIL - 2014

Title : SIGNAGE PLAN SH-103 (MANGHWE - GOVINDPUR) (AT CH.- 27+000 TO 28+000)

Drawing No. HOL/BSRDCL/DPR/13510/SP | Rev. 0 | Sheet 28 | A3

CAD File Ref :

Revision					
Sr.	Date:	Description	Drawn	Checked	Approved

Client: AGM (TECH) Bihar State Road Dev. Corporation Ltd. BCM (Tech) Bihar State Road Dev. Corporation Ltd. Patna

Project Title : CONSULTANCY SERVICES FOR PREPARATION OF DETAILED PROJECT REPORT (DPR) FOR SH-103 (MANGHWE- GOVINDPUR)

Consultant: HOLTEC CONSULTING PRIVATE LIMITED

Designed	Checked	Approved
GBK	SM	JIG
Drawn	Scale	Date
GBK	NTS	APRIL - 2014

Title : SIGNAGE PLAN SH-103 (MANGHWE - GOVINDPUR) (AT CH.- 28+000 TO 29+000)

Drawing No.	Rev.	Sheet
HOL/BSRDCL/DPR/13510/SP	0	29

Dir File Ref : A3

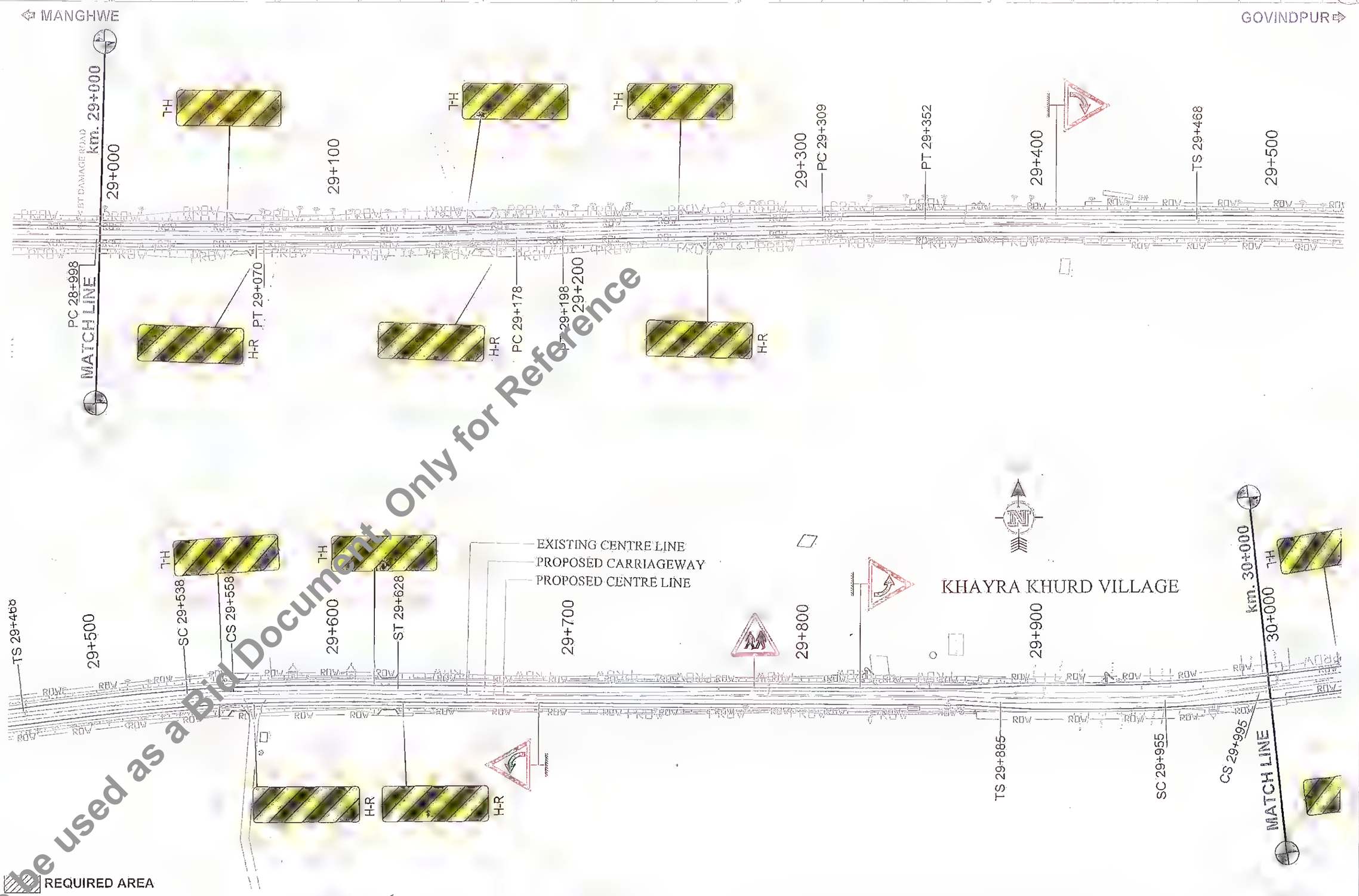

Revision					
Rev.	Date	Description	Drawn	Checked	Approved

Client: Bihar State Road Development Corporation Ltd. Nawada

Project Title : CONSULTANCY SERVICES FOR PREPARATION OF DETAILED PROJECT REPORT (DPR) FOR SH-103 (MANGHWE- GOVINDPUR)

Consultant: HOLTEC CONSULTING PRIVATE LIMITED

Designed	Checked	Approved
GBK	SM	JIG
Drawn: GBK	Scale: NTS	Date: APRIL - 2014

Title : SIGNAGE PLAN SH-103 (MANGHWE - GOVINDPUR) (AT CH.- 29+000 TO 30+000)

Drawing No. HOL/BSRDCL/DPR/13510/SP | Rev. 0 | Sheet 30 | A3

DGM (Tech) Bihar State Road Devp. Corp. Ltd.

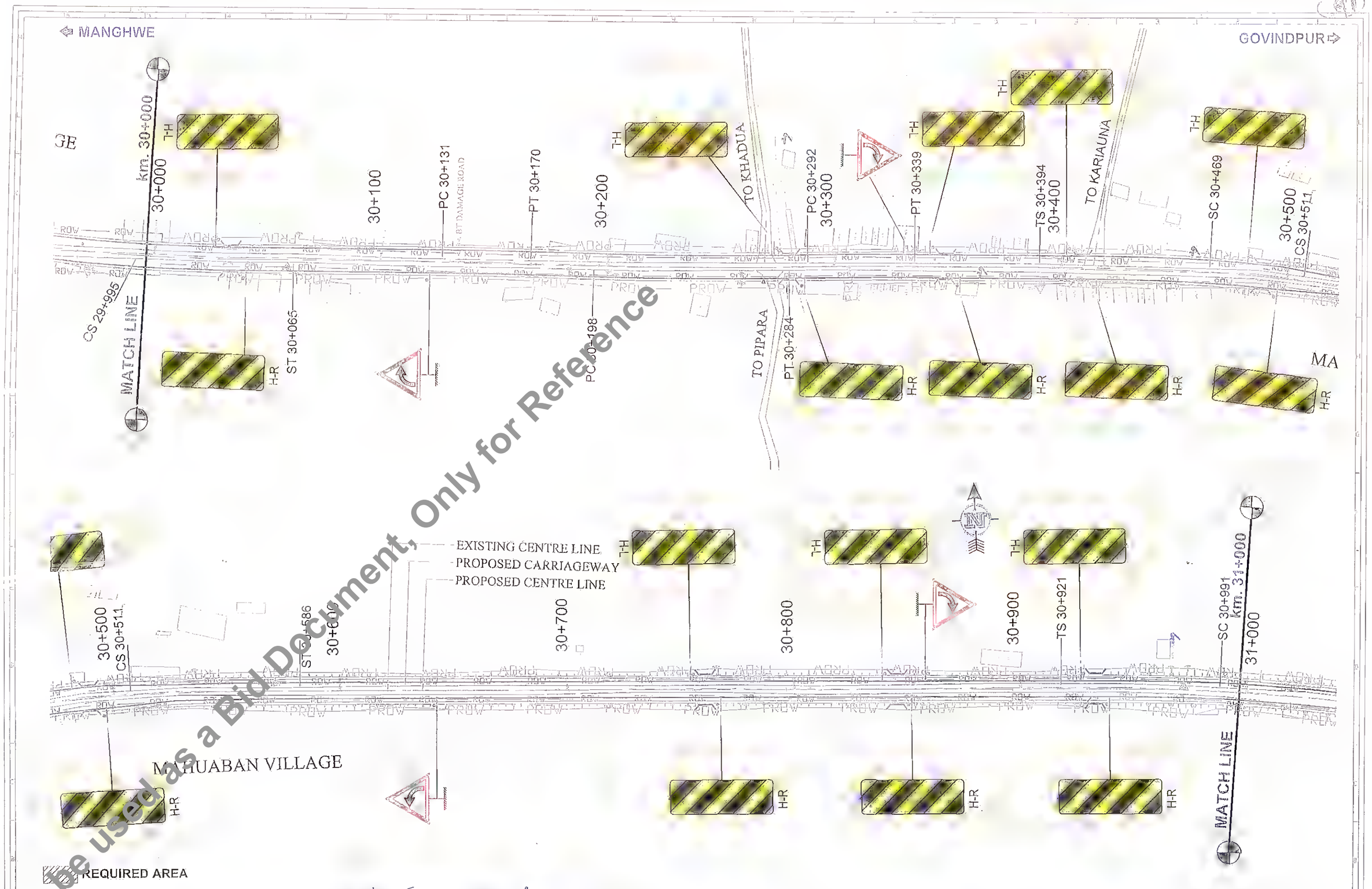

Revision					
Rev.	Date	Description	Drawn	Checked	Approved

Client: Bihar State Road Development Corporation Ltd. Patna

Project Title : CONSULTANCY SERVICES FOR PREPARATION OF DETAILED PROJECT REPORT (DPR) FOR SH-103 (MANGHWE- GOVINDPUR)

Consultant: HOLTEC CONSULTING PRIVATE LIMITED

Designed	Checked	Approved
GBK	SM	JIG
Drawn	Scale	Date
GBK	NTS	APRIL - 2014

Title : SIGNAGE PLAN SH-103 (MANGHWE - GOVINDPUR) (AT CH.- 30+000 TO 31+000)

Drawing No.	Rev.	Sheet
HOL/BSRDCL/DPR/13510/SP	0	31

CAD File Ref : A3

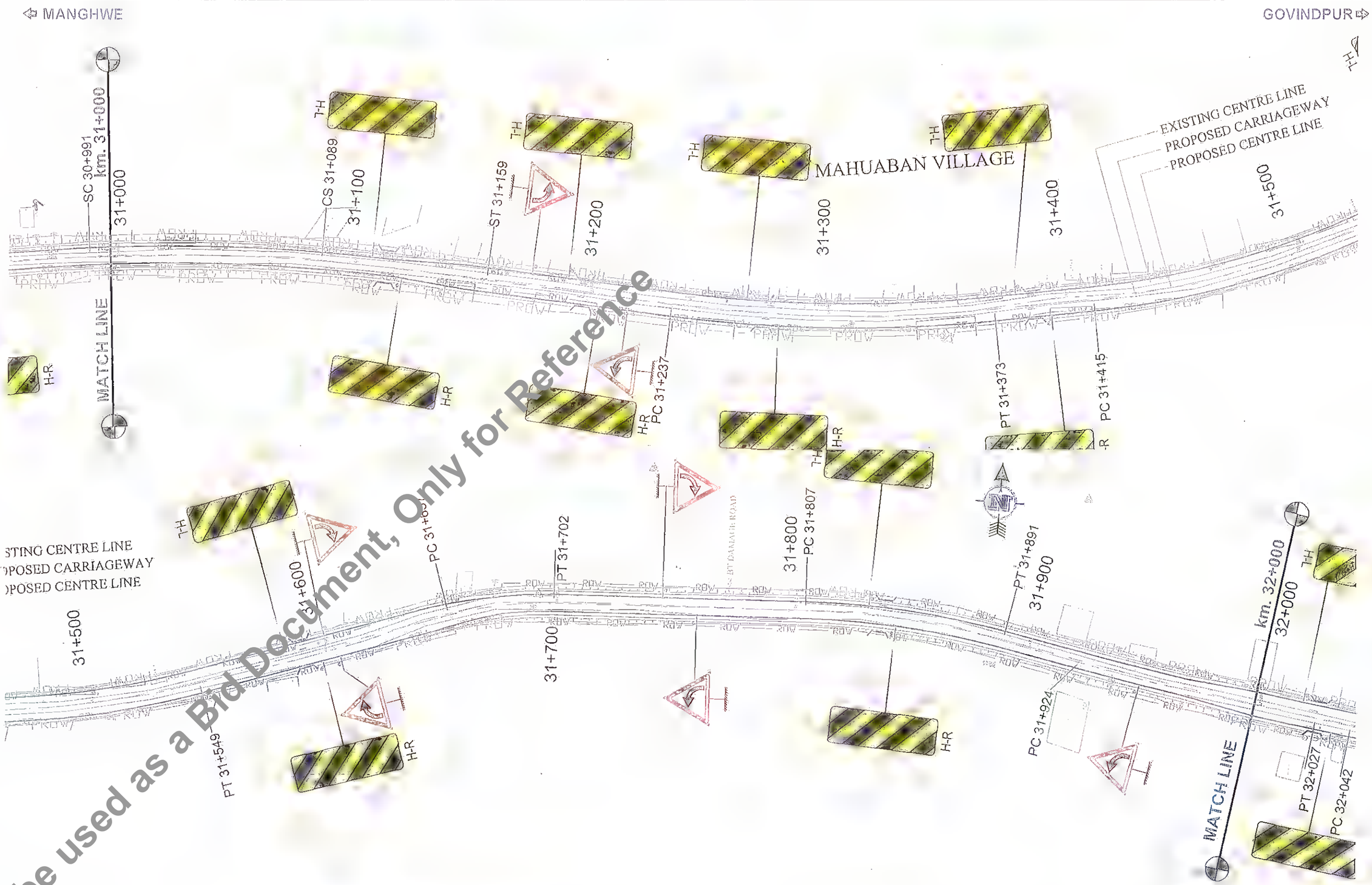

Revision					
Rev.	Date:	Description	Drawn	Checked	Approved

Client: Bihar State Road Devp. Corporation Ltd.

Project Title : CONSULTANCY SERVICES FOR PREPARATION OF DETAILED PROJECT REPORT (DPR) FOR SH-103 (MANGHWE- GOVINDPUR)

Consultant: HOLTEC CONSULTING PRIVATE LIMITED

Designed	Checked	Approved
GBK	SM	JIG
Drawn	Scale	Date
GBK	NTS	APRIL - 2014

Title : SIGNAGE PLAN SH-103 (MANGHWE - GOVINDPUR) (AT CH.- 31+000 TO 32+000)

Drawing No. HOL/BSRDCL/DPR/13510/SP | Rev. 0 | Sheet 32

CAD File Ref : | A3

Revision					
Rev.	Date:	Description	Drawn	Checked	Approved

Client: Bihar State Road Development Corporation Ltd.
Bihar State Road Devp. Corp. Ltd.
PIU, Nawada
DGM (Tech) Bihar State Road Devp. Corp. Ltd. Nawada

Project Title : CONSULTANCY SERVICES FOR PREPARATION OF DETAILED PROJECT REPORT (DPR) FOR SH-103 (MANGHWE- GOVINDPUR)

Consultant: HOLTEC CONSULTING PRIVATE LIMITED

Designed	Checked	Approved
GBK	SM	JIG
Drawn	Scale	Date
GBK	NTS	APRIL - 2014

Title : SIGNAGE PLAN SH-103 (MANGHWE - GOVINDPUR) (AT CH.- 32+000 TO 33+000)

Drawing No.	Rev.	Sheet
HOL/BSRDCL/DPR/13510/SP	0	33

CAD File Ref : A3

Revision					
Rev.	Date:	Description	Drawn	Checked	Approved

Client: Bihar State Road Development Corporation Ltd. PIU, Nawada

Project Title : CONSULTANCY SERVICES FOR PREPARATION OF DETAILED PROJECT REPORT (DPR) FOR SH-103 (MANGHWE- GOVINDPUR)

Consultant: HOLTEC CONSULTING PRIVATE LIMITED

Designed	Checked	Approved
GUK	SM	JIG
Drawn: GUK	Scale: NTS	Date: APRIL - 2014

Title : SIGNAGE PLAN SH-103 (MANGHWE - GOVINDPUR) (AT CH.- 33+000 TO 34+000)

Drawing No. HOL/BSRDCL/DPR/13510/SP | Rev. 0 | Sheet 34 | A3

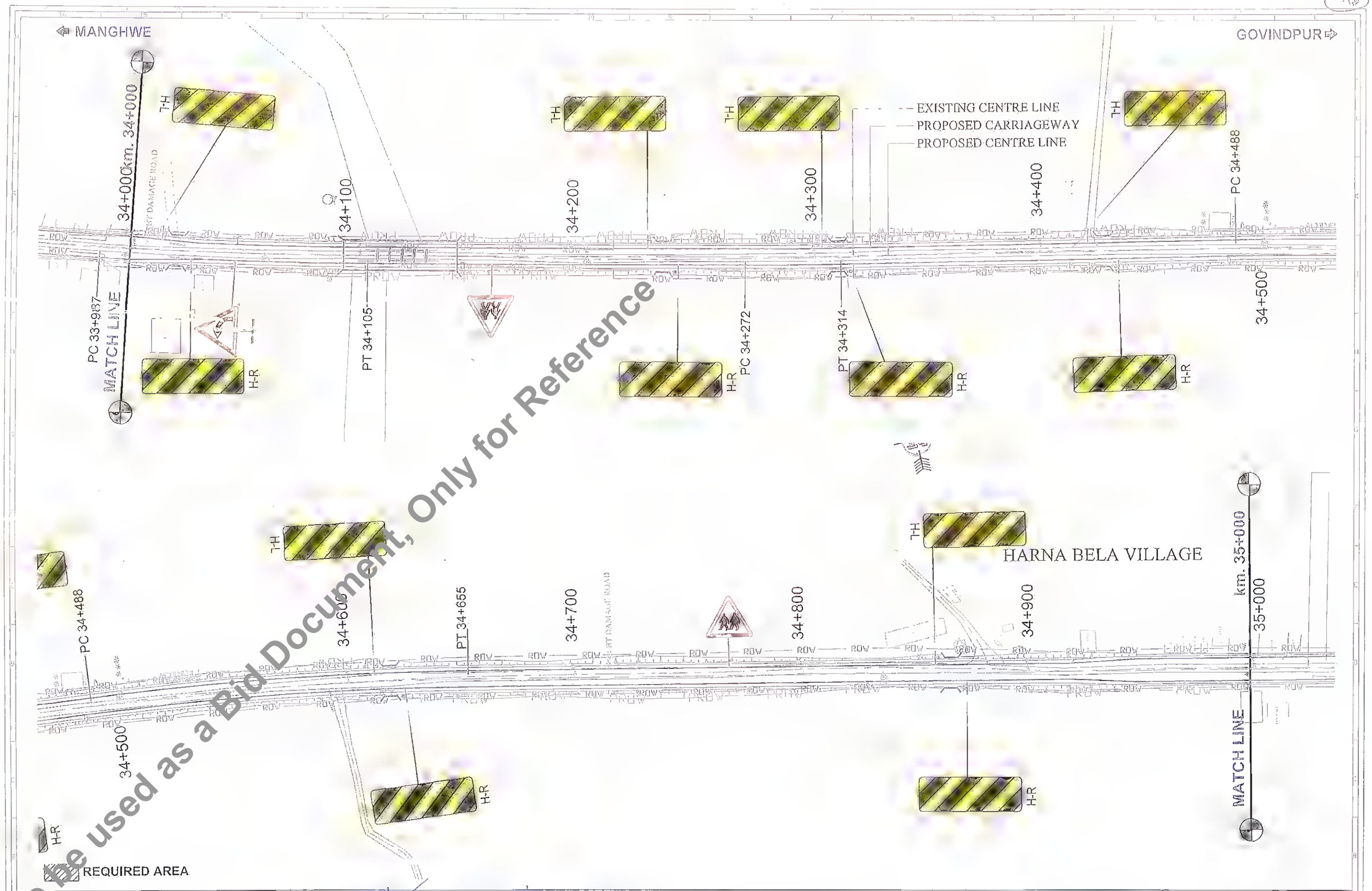

Revision					
Rev.	Date.	Description	Drawn	Checked	Approved

Client: Bihar State Road Development Corporation Ltd. PIU, Nawada

Project Title : CONSULTANCY SERVICES FOR PREPARATION OF DETAILED PROJECT REPORT (DPR) FOR SH-103 (MANGHWE- GOVINDPUR)

Consultant: HOLTEC CONSULTING PRIVATE LIMITED

Designed	Checked	Approved
GBK	SM	JIG
Drawn	Scale	Date
GBK	NTS	APRIL - 2014

Title : SIGNAGE PLAN SH-103 (MANGHWE- GOVINDPUR) (AT CH.- 34+000 TO 35+000)

Drawing No. HOL/BSRDCL/DPR/13510/SP | Rev. 0 | Sheet 35

GB Rev Ref : | A3

Revision					
Rev.	Date:	Description	Drawn	Checked	Approved

Client:

Bihar State Road Devp. Corp. Ltd.
Development Corporation, Nawada

DGM (Tech)
Bihar State Road Devp. Corp. Ltd.
PIU, Nawada

Project Title :
CONSULTANCY SERVICES FOR PREPARATION OF DETAILED PROJECT REPORT (DPR) FOR SH-103 (MANGHWE- GOVINDPUR)

Consultant: HOLTEC CONSULTING PRIVATE LIMITED

Designed	Checked	Approved
GBK	SM	JIG
Drawn: GHK	Scale: NTS	Date: APRIL - 2014

Title : SIGNAGE PLAN
SH-103 (MANGHWE - GOVINDPUR)
(AT CH.- 35+000 TO 36+000)

Drawing No.	Rev.	Sheet
HOL/BSRDCL/DPR/13510/SP	0	36

CAD File Ref.: A3

Revision					
Rev.	Date:	Description	Drawn	Checked	Approved

Client:

Bihar State Road Development Corporation Ltd.
Bihar State Road Devp. Corp. Ltd.
PIU, Nawada

Project Title :
CONSULTANCY SERVICES FOR PREPARATION OF DETAILED PROJECT REPORT (DPR) FOR SH-103 (MANGHWE- GOVINDPUR)

Consultant: HOLTEC CONSULTING PRIVATE LIMITED

Designed	Checked	Approved
GBK	SM	JIG
Drawn	Scale	Date
GBK	NTS	APRIL - 2014

Title : SIGNAGE PLAN SH-103 (MANGHWE - GOVINDPUR) (AT CH.- 36+000 TO 37+000)

Drawing No: HOL/BSRDCL/DPR/13510/SP | Rev. 0 | Sheet 37 | A3

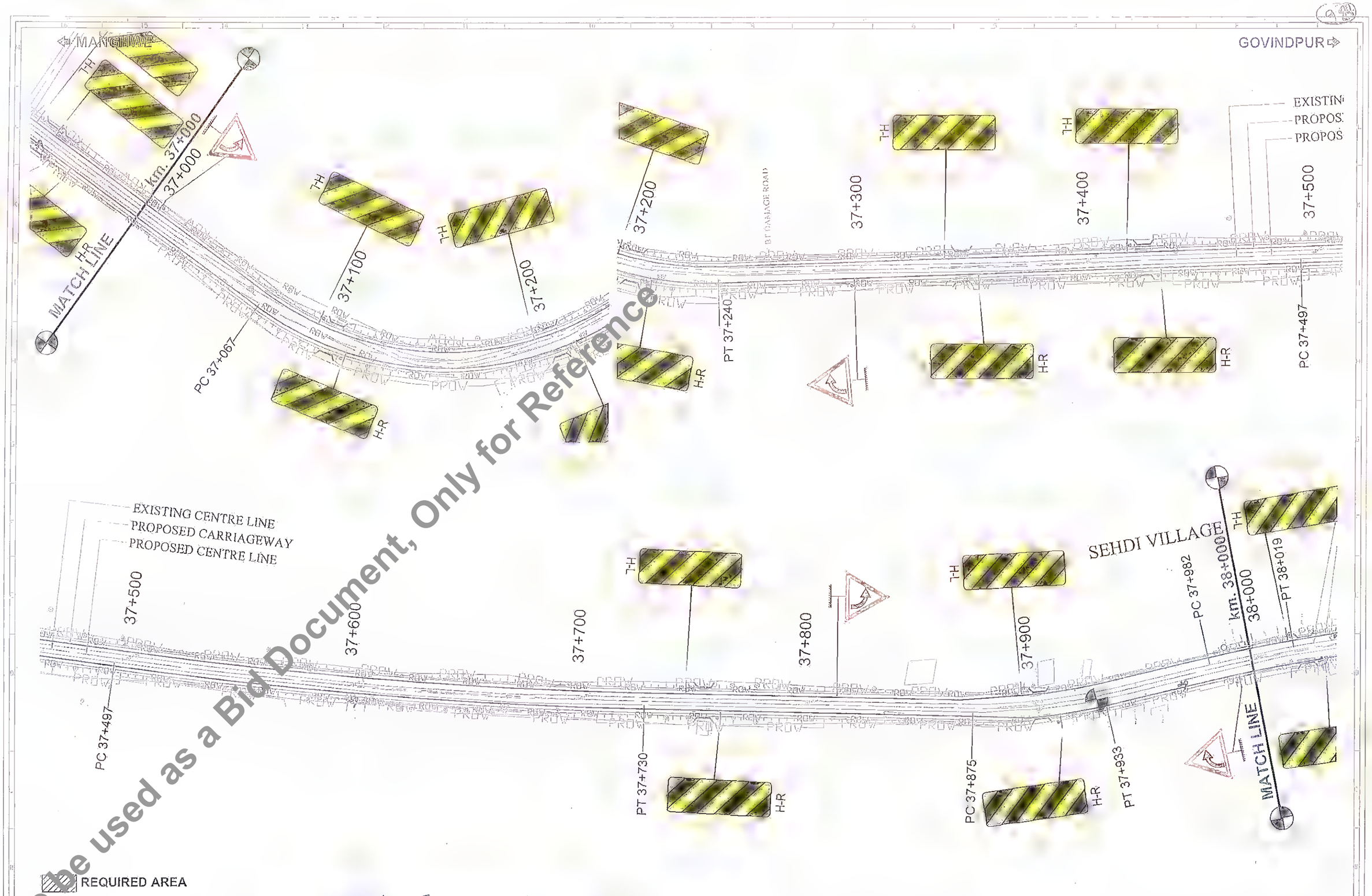

Revision					
Rev.	Date:	Description	Drawn	Checked	Approved

Client: Bihar State Road Development Corporation Ltd. Patna
Bihar State Road Devp. Corp. Ltd. PIU, Nawada

Project Title : CONSULTANCY SERVICES FOR PREPARATION OF DETAILED PROJECT REPORT (DPR) FOR SH-103 (MANGHWE- GOVINDPUR)

Consultant: HOLTEC CONSULTING PRIVATE LIMITED

Designed	Checked	Approved
GBK	SM	JKG
Drawn	Scale	Date
GBK	NTS	APRIL - 2014

Title : SIGNAGE PLAN SH-103 (MANGHWE - GOVINDPUR) (AT CH.- 37+000 TO 38+000)

Drawing No. HOL/BSRDCL/DPR/13510/SP | Rev. 0 | Sheet 38

CAD File Ref : | A1

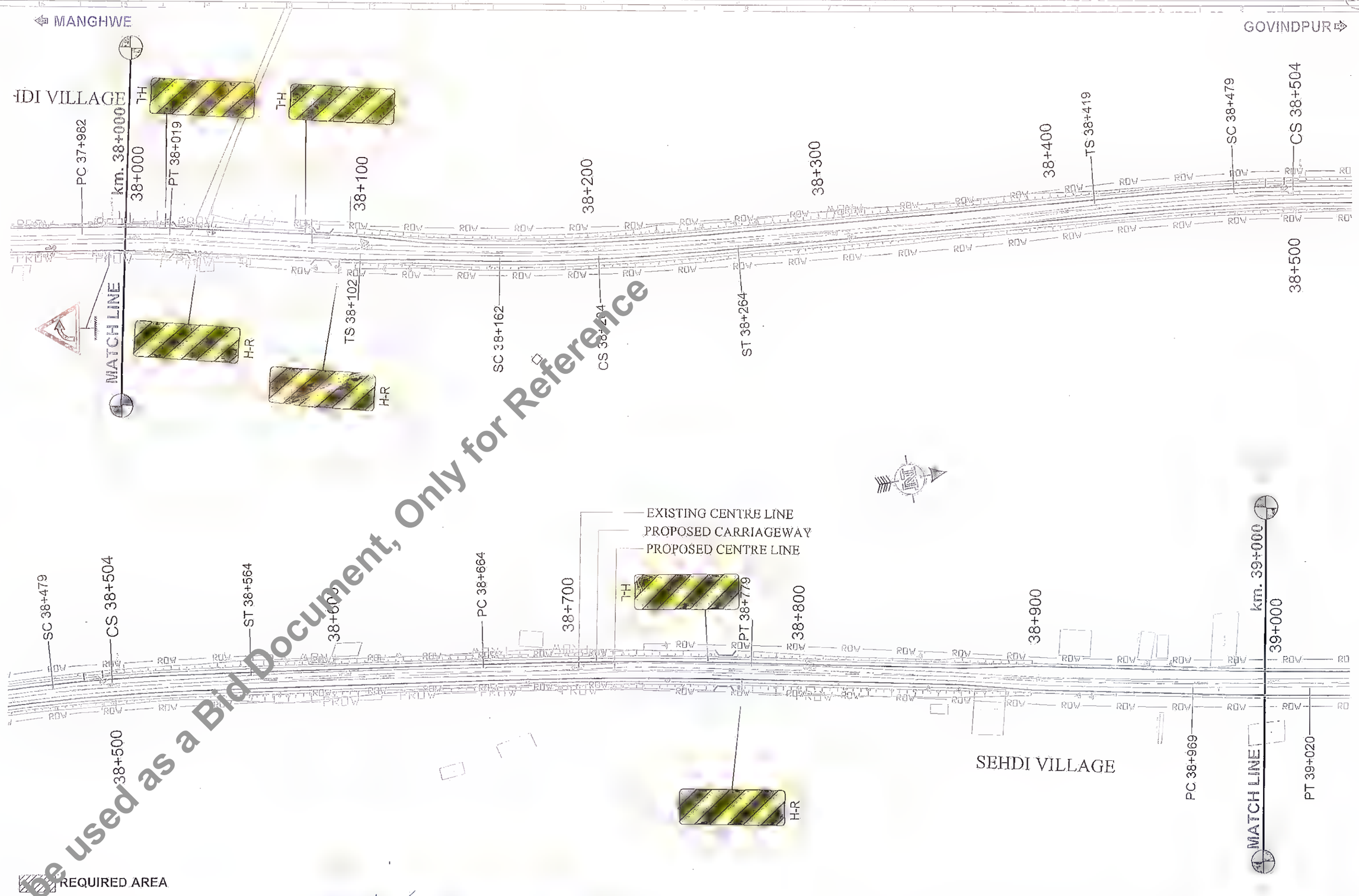

Revision					
Rev.	Date	Description	Drawn	Checked	Approved

Client: Bihar State Road Development Corporation Ltd. PIU, Nawada — DGM (Tech)

Project Title : CONSULTANCY SERVICES FOR PREPARATION OF DETAILED PROJECT REPORT (DPR) FOR SH-103 (MANGHWE- GOVINDPUR)

Consultant: HOLTEC CONSULTING PRIVATE LIMITED

Designed	Checked	Approved
GBK	SM	JIG
Drawn	Scale	Date
GBK	NTS	APRIL - 2014

Title : SIGNAGE PLAN SH-103 (MANGHWE - GOVINDPUR) (AT CH.- 38+000 TO 39+000)

Drawing No. HOL/BSRDCL/DPR/13510/SP | Rev. 0 | Sheet 39 | A3

(90)

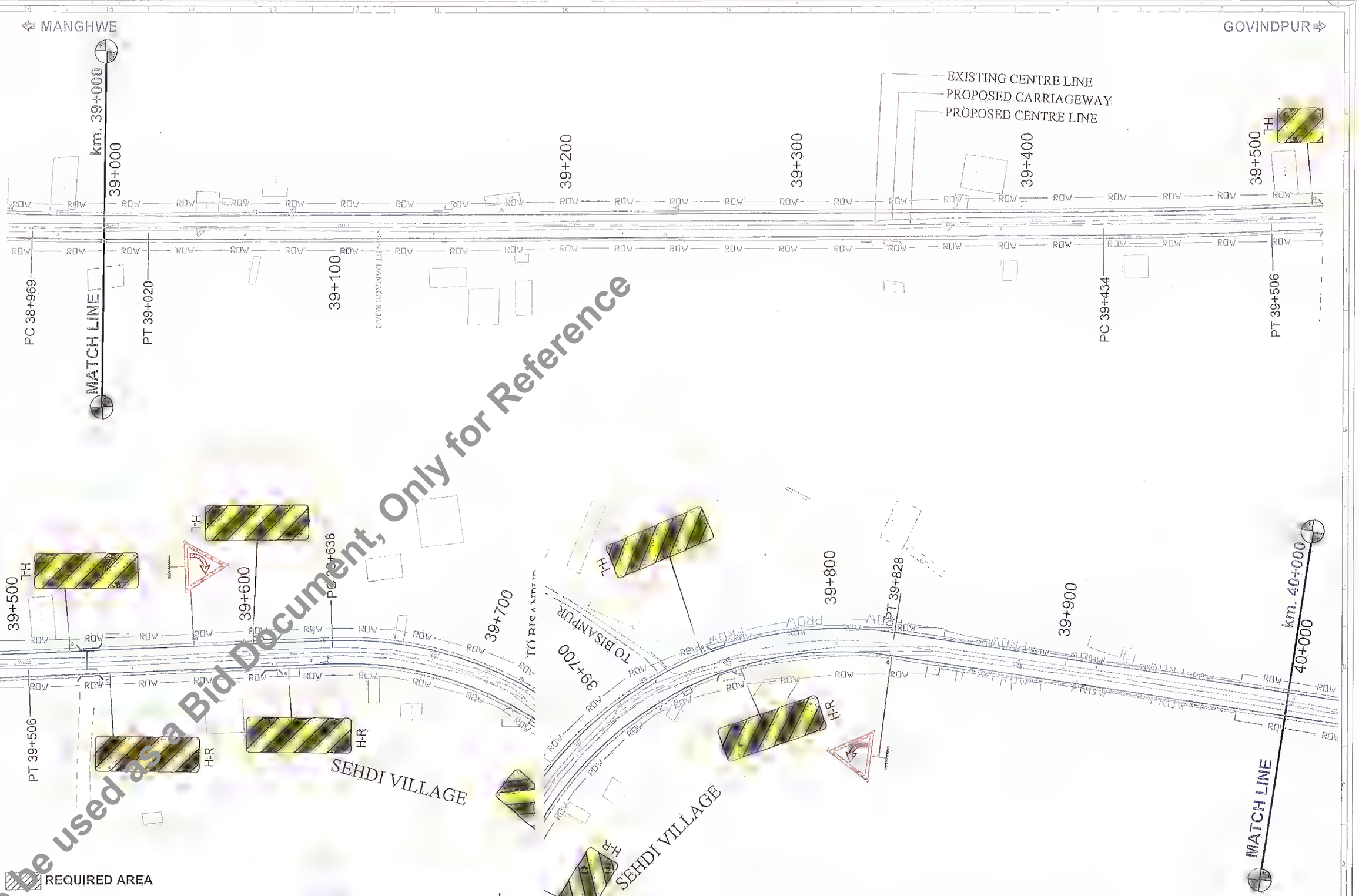

Revision					
Rev.	Date:	Description	Drawn	Checked	Approved

Client: Bihar State Road Development Corporation Ltd. PIU, Nawada

DGM (Tech) Bihar State Road Devp. Corp. Ltd. Nawada

Project Title : CONSULTANCY SERVICES FOR PREPARATION OF DETAILED PROJECT REPORT (DPR) FOR SH-103 (MANGHWE- GOVINDPUR)

Consultant: HOLTEC CONSULTING PRIVATE LIMITED

Designed	Checked	Approved
GRK	SM	JTG
Drawn: GBK	Scale: NTS	Date: APRIL - 2014

Title : SIGNAGE PLAN SH-103 (MANGHWE - GOVINDPUR) (AT CH.- 39+000 TO 40+000)

Drawing No. HOL/BSRDCL/DPR/13510/SP | Rev. 0 | Sheet 40 | A3

Revision					
Rev.	Date	Description	Drawn	Checked	Approved

Client: Bihar State Road Development Corporation Ltd. (DGM (Tech) Bihar State Road Devp. Corp. Ltd. PIU, Nawada)

Project Title : CONSULTANCY SERVICES FOR PREPARATION OF DETAILED PROJECT REPORT (DPR) FOR SH-103 (MANGHWE- GOVINDPUR)

Consultant: HOLTEC CONSULTING PRIVATE LIMITED

Designed	Checked	Approved
GBK	SM	JIG
Drawn: GBK	Scale: NTS	Date: APRIL - 2014

Title : SIGNAGE PLAN SH-103 (MANGHWE - GOVINDPUR) (AT CH.- 40+000 TO 41+000)

Drawing No. HOL/BSRDCL/DPR/13510/SP | Rev. 0 | Sheet 41

DD No Ref. : | A3

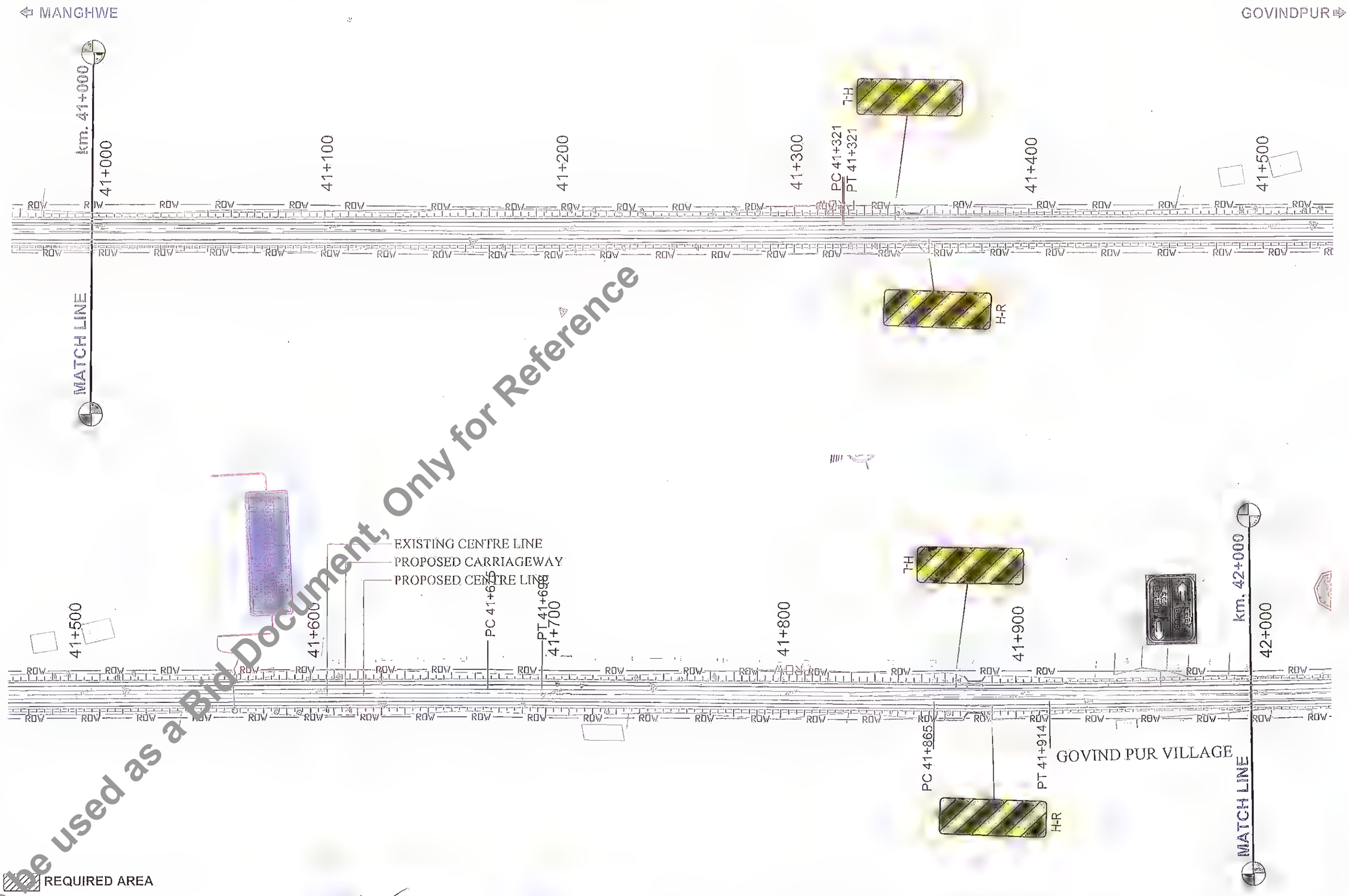

REQUIRED AREA

Revision					
Rev.	Date:	Description	Drawn	Checked	Approved

Client: Bihar State Road Development Corporation Ltd. PIU, Nawada

Project Title : Tecon Devpo Nawada
CONSULTANCY SERVICES FOR PREPARATION OF DETAILED PROJECT REPORT (DPR) FOR SH-103 (MANGHWE- GOVINDPUR)

Consultant: HOLTEC CONSULTING PRIVATE LIMITED

Designed	Checked	Approved
GBK	SM	JIG
Drawn: GBK	Scale: NTS	Date: APRIL - 2014

Title : SIGNAGE PLAN
SH-103 (MANGHWE - GOVINDPUR)
(AT CH.- 41+000 TO 42+000)

Drawing No. HOL/BSRDCL/DPR/13510/SP | Rev. 0 | Sheet 42 | A3

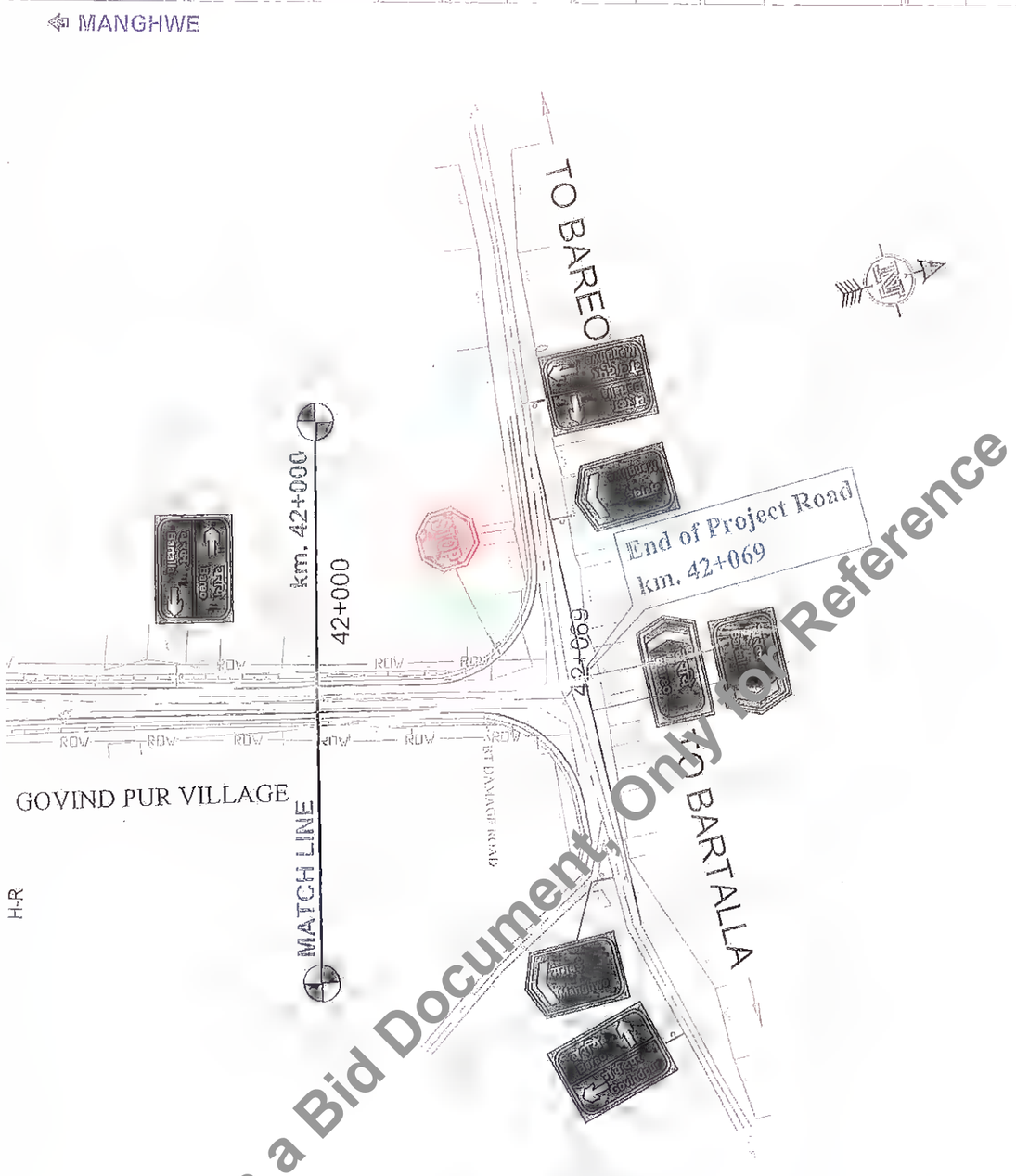

Revision					
Rev.	Date:	Description	Drawn	Checked	Approved

Client: Bihar State Road Development Corporation Ltd. — Bihar State Road Devp. Corp. Ltd. PIU, Nawada

Project Title : CONSULTANCY SERVICES FOR PREPARATION OF DETAILED PROJECT REPORT (DPR) FOR SH-103 (MANGHWE- GOVINDPUR)

Consultant: HOLTEC CONSULTING PRIVATE LIMITED

Designed	Checked	Approved
GBK	SM	JIG
Drawn	Scale	Date
GBK	NTS	APRIL - 2014

Title : SIGNAGE PLAN SH-103 (MANGHWE - GOVINDPUR) (AT CH.- 42+000 TO 42+069)

Drawing No: HOL/BSRDCL/DPR/13510/SP — Rev. 0 — Sheet 43

CAD File Ref : — A3

DRAINAGE PLAN

Design of Longitudinal Drain

Design of longitudianl pipe drain has been carried in accordance with IRC:SP:42-2014
Design Return Period adopted - 10 years (As per section 7.1.4 of SP:42)

1. Hydrologic Design:

Q = 0.028 P f Ac Ic

Where, Q= Maximum runoff (cum/sec)
P= Coeff. of runoff for the catchment characteristics
Ac= Area of catchment in hectares
Ic= Critical intensity of rainfall in cm/hr.
f = Spread Factor (1.0)

Coeff. of runoff (P):

Pavement Surface	:	0.9	Tabl 6.5, IRC SP-42
Footpath	:	0.8	
Median (Covered)	:	0.8	
Adjacent Land	:	0.4	
Pav	:	0.52	2.5

Catchment Area (Ac):

Bituminous Surface, Width	:	3.50
Footpath + Separator, Width	:	2.00
Median, Width	:	0.00
Adjacent Land, Width	:	15.0

Critical rainfall intensity (Ic):

Ic = F/T*((T + 1) / (Tc + 1))

Where, Ic = Intensity of rainfall within time of concentration, 'Tc' hrs.
F = Total rainfall in cm falling in duration of storm of 'T' hours.
Tc = Time of Concentration in hrs. within a storm duration of "T" hours
T = Duration of total rainfall (F) in hours

From iso-pluvial map for the sub-zone 3(c) in which road lies , 24 hour rainfall of 50 year return period is (in mm)	304
As per Table 6.2 IRC SP42, corresponding 1 hour rainfall is 39 percent of 24 hour rainfall (in mm)	118.56

MANAGER (TECH)
Bihar State Road Devp. Corp. Ltd.
PIU, Nawada

DGM (Tech)
Bihar State Road Devp. Corp. Ltd.
PIU, Nawada

Design of Longitudinal Drain

Duration of total rainfall, T	:	1.00	hr	
F for 50 year return period	:	11.86	cm/hr	Annex V, IRC SP-42
F for 25 year return period	:	10.20	cm/hr	
F for 10 year return period	:	7.94	cm/hr	
F for 2 year return period	:	4.62	cm/hr	

Time of Concenration (Tc):

The time of concentration is the sum of the (i) overland flow time (entry time) and (ii) Channel flow time

$Tc = To + Tf$

$To = 0.092 * [(nL)^{0.8}/(P_2^{0.5} * S^{0.4})]$ min

$Tf = L/(v \times 60)$

Where,

Tc = Time of Concentration in minutes.

n = Manning's roughness co-efficient (0.011)

L = Flow Length

P_2 = 2-year, 24 hour rainfall in mm (118.56)

S = Slope of Catchment area

w = Width of catchment area in 'm'

v = average velocity of water in the drain in 'm/sec' (1.50)

Hydraulic Design:

Discharge $q = (1/n) * A * R^{2/3} * S^{1/2}$

Velocity $V = (1/n) * R^{2/3} * S^{1/2}$

Where,

q = Discharge in 'Cum/Sec'

V = Mean velocity in ' m/sec'

n = Manning's Roughness coefficient, (0.013)

R = Hydraulic Radius in 'm'

S = Bed slope of drain

0 A = Area of the flow cross-section in' m^2'

MANAGER (TECH)
Bihar State Road Devp. Corp. Ltd.
PIU, Nawada

DGM (Tech)
Bihar State Road Devp. Corp. Ltd.
PIU, Nawada

Design of Longitudinal Drain

Checks:

1) $q > Q$
2) Maximum V : 6 m/sec
3) $dn > dc$

$$dc \quad : \quad \{q^2/(b^2 * g)\}^{(1/3)}$$

Where, dn = Normal depth of flow in 'm'
dc = Critical depth of flow in 'm'
q = Discharge in 'Cum/Sec'
b = Width of Drain
g = acceleration due to gravity, 9.81 m^2/s

MANAGER (TECH)
Bihar State Road Devp. Corp. Ltd.
PIU, Nawada

DGM (Tech)
Bihar State Road Devp. Corp
PIU, Nawada

Design of Line Drain

Chainage				FRL		Invert Level			Hydrologic Calculations				Hydraulic Calculations								Checks :		
From	To	Length (m)	Direction of Flow	Ch1	Ch2	Ch1	Ch2	Drain bed Slope	Time of Concntn. in Minutes (tc):	Critical rainfall intensity in cm (Ic):	Catchment area in Hectares (Ac)	Discharge (Q) in m^3/sec	Drain bed Width in m (b)	Flow Depth req. m (dn)	Wetted Perimeter	Flow Depth provided in m	Hydraulic Radius in m (R)	Mean Velocity in m/s (V)	Discharge (q) in m^3/sec	Critical Depth (dc)	Capacity (q>Q)	Depth of flow (dc<dn)	Velocity (Max. 6 m/sec)
Drain Outlet at culvert at 21+425																							
		180																					
21430	21530	100	↑	113.834	113.837	113.334	113.087	0.002	2.76	41.61	0.205	0.225	0.50	0.475	2.056	0.550	0.281	1.640	0.947	0.12	OK	OK	OK
21530	21610	80	↑	113.837	113.840	113.087	113.223	0.002	2.76	41.61	0.164	0.100	0.50	0.360	1.679	0.417	0.228	1.184	0.452	0.03	OK	OK	OK
Drain Outlet at culvert at 21+620																							
		300																					
21620	21730	110	↑	113.840	113.878	113.240	113.068	0.002	4.09	39.30	0.226	0.355	0.50	0.572	2.223	0.609	0.304	1.372	0.927	0.12	OK	OK	OK
21730	21830	100	↑	113.878	113.995	113.068	113.316	0.002	4.09	39.30	0.205	0.225	0.50	0.474	1.853	0.478	0.253	1.530	0.716	0.07	OK	OK	OK
21830	21920	90	↑	113.995	114.100	113.316	113.530	0.002	4.09	39.30	0.185	0.106	0.50	0.367	1.547	0.370	0.208	1.316	0.424	0.02	OK	OK	OK
Drain Outlet at culvert at 21+930																							
		190																					
21930	22030	100	↑	114.112	114.229	113.552	113.385	[illegible]	2.87	41.42	0.205	0.237	0.50	0.484	2.319	0.643	0.317	1.458	1.072	0.16	OK	OK	OK
22030	22120	90	↑	114.229	114.310	113.385	113.523	0.002	2.87	41.42	0.185	0.112	0.50	0.373	2.158	0.586	0.295	1.334	0.850	0.10	OK	OK	OK
		70																					
22130	22200	70	↓	114.311	114.300	113.531	113.40[illegible]	0.002	1.53	43.73	0.144	0.092	0.50	0.351	2.460	0.693	0.336	1.564	1.293	0.23	OK	OK	OK
END of RCC Drain																							
Start of RCC Drain																							
		290																					
24100	24200	100	↑	113.181	113.18[illegible]	112.251	112.407	0.002	3.98	39.50	0.205	0.345	0.50	0.565	2.145	0.582	0.293	1.342	0.845	0.10	OK	OK	OK
24200	24300	100	↑	113.189	113.19[illegible]	112.407	112.562	0.002	3.98	39.50	0.205	0.226	0.50	0.475	1.726	0.433	0.234	1.152	0.466	0.03	OK	OK	OK
24300	24390	90	↑	113.196	113.202	112.562	112.702	0.002	3.98	39.50	0.185	0.107	0.50	0.367	1.349	0.300	0.178	0.958	0.230	0.01	OK	OK	OK
		400																					
24400	24500	100	↓	113.203	113.210	112.703	112.610	0.002	5.20	37.38	0.205	0.113	0.50	0.373	1.631	0.400	0.221	1.256	0.452	0.03	OK	OK	OK
24500	24600	100	↓	113.210	113.361	112.610	112.359	0.003	5.20	37.38	0.205	0.225	0.50	0.474	2.768	0.802	0.377	2.011	2.098	0.47	OK	OK	OK
24600	24700	100	↓	113.361	113.650	112.359	111.804	0.006	5.20	37.38	0.205	0.338	0.50	0.559	5.153	1.645	0.685	4.450	15.704	0.50	OK	OK	OK
24700	24800	100	↓	113.650	113.653	111.804	111.250	0.006	5.20	37.38	0.205	0.450	0.50	0.635	6.730	2.202	0.884	5.277	31.412	0.60	OK	OK	OK
Drain Outlet at Bridge at 24+800																							
		100																					
24840	24940	100	↑	113.653	113.597	111.487	112.279	0.008	2.53	42.00	0.205	0.126	0.50	0.387	3.662	1.118	0.494	4.275	7.731	0.35	OK	OK	OK
24940	25000	60	↑	113.597	113.514	112.279	112.914	0.011	2.53	42.00	0.123	0.076	0.50	0.333	1.631	0.400	0.221	2.889	1.040	0.15	OK	OK	OK
		300																					
25000	[illegible]	100	↓	113.514	113.377	112.914	112.673	0.002	4.09	39.30	0.205	0.118	0.50	0.379	1.924	0.503	0.263	1.547	0.781	0.08	OK	OK	OK
25100	25200	100	↓	113.377	113.239	112.673	112.432	0.002	4.09	39.30	0.205	0.237	0.50	0.484	2.217	0.607	0.303	1.705	1.146	0.18	OK	OK	OK
25200	25300	100	↓	113.239	113.106	112.432	112.206	0.002	4.09	39.30	0.205	0.355	0.50	0.572	2.480	0.700	0.339	1.777	1.493	0.30	OK	OK	OK
Drain Outlet at culvert at 25+300																							
		190																					
25310	25410	100	↓	113.093	112.966	112.493	112.260	0.002	2.87	41.42	0.205	0.125	0.50	0.385	1.929	0.505	0.263	1.523	0.774	0.08	OK	OK	OK
25410	25500	90	↓	112.966	112.853	112.260	112.053	0.002	2.87	41.42	0.185	0.237	0.50	0.484	2.197	0.600	0.300	1.658	1.094	0.16	OK	OK	OK

MANAGER (TECH)
Bihar State Road Devp. Corp. Ltd.
PIU, Nawada

DGM (Tech)
Bihar State Road Devp. Corp. Ltd.
PIU, Nawada

Design of Line Drain

Chainage				FRL		Invert Level			Hydrologic Calculations				Hydraulic Calculations								Checks :		
From	To	Length (m)	Direction of Flow	Ch1	Ch2	Ch1	Ch2	Drain bed Slope	Time of Concntn. in Minutes (tc):	Critical rainfall intensity in cm (Ic):	Catchment area in Hectares (Ac)	Discharge (Q) in m³/sec	Drain bed Width in m (b)	Flow Depth req. m (dn)	Wetted Perimeter	Flow Depth provided in m	Hydraulic Radius in m (R)	Mean Velocity in m/s (V)	Discharge (q) in m³/sec	Critical Depth (dc)	Capacity (q>Q)	Depth of flow (dc<dn)	Velocity (Max. 6 m/sec)
END of RCC Drain																							
START of RCC Drain																							
		100																					
27500	27600	100	↓	112.778	112.750	112.178	111.900	0.003	1.87	43.15	0.205	0.130	0.50	0.390	2.338	0.650	0.320	1.896	1.417	0.2730	OK	OK	OK
Drain Outlet at culvert at 27+600																							
		130																					
27610	27710	100	↓	112.747	112.719	112.147	111.888	0.003	2.2[illegible]	42.58	0.205	0.128	0.50	0.388	2.284	0.631	0.312	1.801	1.285	0.22	OK	OK	OK
27710	27740	30	↓	112.719	112.705	111.888	111.805	0.003	[illegible]	42.58	0.062	0.167	0.50	0.425	2.480	0.700	0.339	1.969	1.654	0.37	OK	OK	OK
		200																					
Drain Outlet at culvert at 27+740																							
27750	27850	100	↓	112.698	112.606	112.098	111.881	0.0[illegible]2	2.20	42.58	0.205	0.128	0.50	0.388	1.985	0.525	0.271	1.501	0.808	0.09	OK	OK	OK
27850	27950	100	↓	112.606	112.511	111.881	111.671	0.002	2.20	42.58	0.205	0.256	0.50	0.499	2.310	0.640	0.316	1.635	1.193	0.19	OK	OK	OK
END of RCC Drain																							
Start of RCC Drain																							
		70																					
29900	29970	70	↑	110.946	110.993	110.2[illegible]	110.393	0.002	1.53	43.73	0.144	0.092	0.50	0.351	1.631	0.400	0.221	1.287	0.463	0.03	OK	OK	OK
		240																					
29980	30080	100	↓	110.994	110.978	110.[illegible]94	110.335	0.002	3.42	40.46	0.205	0.122	0.50	0.382	1.753	0.443	0.238	1.178	0.492	0.03	OK	OK	OK
30080	30120	40	↓	110.978	110.97[illegible]	110.335	110.272	0.002	3.42	40.46	0.082	0.170	0.50	0.428	1.914	0.500	0.261	1.249	0.624	0.05	OK	OK	OK
30120	30220	100	↓	110.972	111.0[illegible]	110.272	110.870	0.010	3.42	40.46	0.205	0.292	0.50	0.527	1.732	0.436	0.235	2.932	1.195	0.19	OK	OK	OK
30220	30270	50	↓	111.506	[illegible]	110.870	111.321	0.010	3.42	40.46	0.103	0.353	0.50	0.570	1.631	0.400	0.221	2.809	1.011	0.14	OK	OK	OK
Drain Outlet at culvert at 30+285																							
		120																					
30290	30390	100	↑	111.[illegible]71	111.487	111.171	110.732	0.004	2.09	42.77	0.205	0.154	0.50	0.413	2.068	0.555	0.283	2.194	1.283	0.22	OK	OK	OK
30390	30410	20	↑	111.487	111.377	110.732	110.627	0.005	2.09	42.77	0.041	0.026	0.50	0.265	2.056	0.550	0.281	2.396	1.384	0.26	OK	OK	OK
Drain Outlet at culvert at 30+[illegible]																							
		80																					
30420	30500	80	↑	111.322	111.271	110.722	110.471	0.003	1.65	43.54	0.164	0.105	0.50	0.365	2.197	0.600	0.300	1.933	1.276	0.22	OK	OK	OK
End of RCC Covered Drain																							
Start of RCC D[illegible]																							
		40																					
31150	31190	40	↑	113.781	113.972	113.081	113.372	0.007	1.20	44.31	0.082	0.053	0.50	0.305	1.631	0.400	0.221	2.396	0.863	0.10	OK	OK	OK
D[illegible] Outlet at culvert at 31+200																							
31200	[illegible]1270	70	↓	114.019	114.352	113.119	113.652	0.008	1.20	44.31	0.144	0.147	0.50	0.406	1.914	0.500	0.261	2.743	1.371	0.26	OK	OK	OK
Drain Outlet at culvert at 31+280																							
		150																					
[illegible]1280	31380	100	↑	114.399	114.874	113.499	114.174	0.007	2.42	42.19	0.205	0.190	0.50	0.446	1.914	0.500	0.261	2.582	1.291	0.23	OK	OK	OK
31380	31430	50	↑	114.874	115.063	114.174	114.400	0.005	2.42	42.19	0.103	0.063	0.50	0.318	1.808	0.462	0.246	2.034	0.905	0.11	OK	OK	OK
		150																					
31440	31540	100	↓	115.069	114.802	114.400	114.125	0.002	2.42	42.19	0.205	0.127	0.50	0.387	1.847	0.476	0.252	1.372	0.638	0.06	OK	OK	OK
31540	31590	50	↓	114.802	114.652	114.125	113.972	0.003	2.42	42.19	0.103	0.190	0.50	0.446	1.858	0.480	0.253	1.707	0.803	0.09	OK	OK	OK
Drain Outlet at culvert at 31+595																							
		50																					

MANAGER (TECH)
Bihar State Road Devp. Corp. Ltd.
PIU, Nawada

DGM (Tech)
Bihar State Road D[illegible]
PIU, N[illegible]

Design of Line Drain

Chainage				FRL		Invert Level			Hydrologic Calculations				Hydraulic Calculations								Checks :		
From	To	Length (m)	Direction of Flow	Ch1	Ch2	Ch1	Ch2	Drain bed Slope	Time of Concntn. in Minutes (tc):	Critical rainfall intensity in cm (Ic):	Catchment area in Hectares (Ac)	Discharge (Q) in m^3/sec	Drain bed Width in m (b)	Flow Depth req. in (dn)	Wetted Perimeter	Flow Depth provided in m	Hydraulic Radius in m (R)	Mean Velocity in m/s (V)	Discharge (q) in m^3/sec	Critical Depth (dc)	Capacity (q>Q)	Depth of flow (dc<dn)	Velocity (Max. 6 m/sec)
31600	31650	50	↑	114.622	114.488	114.072	113.888	0.004	1.31	44.12	0.103	0.066	0.50	0.322	1.631	0.400	0.221	1.704	0.613	0.30	OK	OK	OK
END of RCC Drain																							
START of RCC Drain																							
		130																					
32000	32130	130	↑	115.356	115.973	114.656	115.373	0.006	2.20	42.[illegible]	0.267	0.167	0.50	0.425	1.631	0.400	0.221	2.086	0.751	0.08	OK	OK	OK
		110																					
Drain Outlet at culvert at 32+140																							
		110																					
32140	32250	110	↑	114.862	116.542	115.120	115.862	0.007	[illegible]	42.96	0.226	0.142	0.50	0.402	1.858	0.480	0.253	2.529	1.190	0.19	OK	OK	OK
END of RCC Drain																							
START of RCC Drain																							
		60																					
33200	33260	60	↑	114.862	118.892	118.077	118.292	0.004	1.42	43.93	0.123	0.079	0.50	0.337	1.631	0.400	0.221	1.682	0.605	0.05	OK	OK	OK
Drain Outlet at culvert at 33+275																							
		160																					
33270	33370	100	↑	114.862	119.101	118.011	118.388	0.004	2.53	42.00	0.205	0.202	0.50	0.456	1.950	0.513	0.266	1.956	1.015	0.14	OK	OK	OK
33370	33430	60	↑	114.862	119.221	118.38[illegible]	11[illegible].621	0.004	2.53	42.00	0.123	0.076	0.50	0.333	1.631	0.400	0.221	1.749	0.629	0.05	OK	OK	OK
Drain Outlet at culvert at 33+440																							
Drain Outlet at culvert at 33+455																							
		50																					
33460	33510	50	↑	114.862	119.38[illegible]	118.382	118.683	0.006	1.31	44.12	0.103	0.066	0.50	0.322	1.914	0.500	0.261	2.439	1.219	0.20	OK	OK	OK
Drain Outlet at culvert at 33+520																							
		180																					
33510	33610	100	↑	114.8[illegible]	119.586	118.683	118.854	0.002	2.76	41.61	0.205	0.225	0.50	0.475	2.003	0.531	0.274	1.343	0.736	0.07	OK	OK	OK
33610	33690	80	↑	114.[illegible]62	119.752	118.854	119.152	0.004	2.76	41.61	0.164	0.100	0.50	0.360	1.631	0.400	0.221	1.712	0.616	0.05	OK	OK	OK
Drain Outlet at culvert at 33+700																							
		220																					
33700	33800	100	↑	114.862	119.996	118.874	119.232	0.004	3.20	40.84	0.205	0.270	0.50	0.510	2.094	0.564	0.286	2.000	1.199	0.20	OK	OK	OK
33800	33900	100	↑	114.862	120.218	119.232	119.590	0.004	3.20	40.84	0.205	0.148	0.50	0.407	1.709	0.427	0.232	1.738	0.689	0.06	OK	OK	OK
33900	33920	20	↑	114.862	120.259	119.590	119.659	0.003	3.20	40.84	0.041	0.025	0.50	0.263	1.631	0.400	0.221	1.641	0.591	0.05	OK	OK	OK
		70																					
33930	34000	[illegible]	↓	114.862	120.117	119.668	119.417	0.004	1.53	43.73	0.144	0.092	0.50	0.351	1.914	0.500	0.261	1.882	0.941	0.12	OK	OK	OK
Drain Outlet at culvert at 34+020																							
END of RCC Drain																							

MANAGER (TECH)
Bihar State Road Devp. Corp. Ltd.
PIU, Nawada

DGM (Tech)
Bihar State Road Devp. Corp. Ltd.
PIU, Nawada

Design of Line Drain

Chainage				FRL		Invert Level			Hydrologic Calculations				Hydraulic Calculations								Checks :		
From	To	Length (m)	Direction of Flow	Ch1	Ch2	Ch1	Ch2	Drain bed Slope	Time of Concntn. in Minutes (tc):	Critical rainfall intensity in cm (Ic):	Catchment area in Hectares (Ac)	Discharge (Q) in m^3/sec	Drain bed Width in m (b)	Flow Depth req. m (dn)	Wetted Perimeter	Flow Depth provided in m	Hydraulic Radius in m (R)	Mean Velocity in m/s (V)	Discharge (q) in m^3/sec	Critical Depth (dc)	Capacity (q>Q)	Depth of flow (dc<dn)	Velocity (Max. 6 m/sec)
START of RCC Drain																							
		100																					
34950	35050	100	↑	114.862	123.680	121.739	123.080	0.013	1.87	43.15	0.205	0.130	0.50	0.390	1.631	0.400	0.221	3.253	1.171	0.19	OK	OK	OK
Drain Outlet at culvert at 35+060																							
		70																					
35060	35130	70		114.862	124.010	122.871	123.310	0.006	1.53	43.73	0.144	0.092	0.50	0.351	1.914	0.500	0.261	2.489	1.245	0.21	OK	OK	OK
Drain Outlet at culvert at 35+140																							
		100																					
35130	35230	100	↑	114.862	124.193	123.310	123.493	0.002	1.6	43.15	0.205	0.130	0.50	0.390	1.914	0.500	0.261	1.345	0.672	0.06	OK	OK	OK
Drain Outlet at culvert at 35+245																							
		50																					
35250	35300	50	↓	114.862	124.143	123.615	123.393	0.00[illegible]	1.31	44.12	0.103	0.066	0.50	0.322	2.056	0.550	0.281	2.199	1.270	0.22	OK	OK	OK
END of RCC Drain																							
START of RCC Drain																							
		120																					
37900	38020	120	↓	126.133	125.701	125.533	124.901	0.005	2.09	42.77	0.246	0.154	0.50	0.413	2.197	0.600	0.300	2.504	1.653	0.37	OK	OK	OK
Drain Outlet at culvert at 38025																							
		70																					
38030	38100	70	↓	125.665	125.414	125.[illegible]5	124.664	0.006	1.53	43.73	0.144	0.092	0.50	0.351	2.056	0.550	0.281	2.497	1.442	0.28	OK	OK	OK
END of RCC Drain																							
START of RCC Drain																							
		710																					
38900	39000	100	↓	121.98[illegible]	121.393	121.387	120.757	0.006	8.65	31.41	0.205	0.095	0.50	0.354	1.731	0.435	0.235	2.325	0.946	0.12	OK	OK	OK
39000	39100	100	↓	121.393	120.948	120.757	120.277	0.005	8.65	31.41	0.205	0.189	0.50	0.444	1.831	0.470	0.249	2.112	0.964	0.13	OK	OK	OK
39100	39200	100	↓	120.948	120.504	120.277	119.798	0.005	8.65	31.41	0.205	0.284	0.50	0.520	1.930	0.506	0.263	2.188	1.113	0.17	OK	OK	OK
39200	39300	100	↓	120.504	120.059	119.798	119.318	0.005	8.65	31.41	0.205	0.378	0.50	0.588	2.030	0.541	0.277	2.267	1.276	0.22	OK	OK	OK
39300	39400	100	↓	120.059	119.615	119.318	118.838	0.005	8.65	31.41	0.205	0.473	0.50	0.650	2.129	0.576	0.291	2.339	1.450	0.29	OK	OK	OK
39400	39500	100	↓	119.615	119.170	118.838	118.358	0.005	8.65	31.41	0.205	0.567	0.50	0.708	2.229	0.611	0.305	2.414	1.640	0.37	OK	OK	OK
39500	39610	110	↓	119.481	119.481	118.358	117.831	0.005	8.65	31.41	0.226	0.671	0.50	0.768	4.601	1.450	0.615	3.851	10.889	0.48	OK	OK	OK
Drain Outlet at culvert at 39+610																							
		60																					
39620	39720	100	↓	118.636	118.128	118.036	117.434	0.006	2.53	42.00	0.205	0.126	0.50	0.387	1.897	0.494	0.259	2.423	1.189	0.19	OK	OK	OK
39720	39780	60	↓	118.128	117.760	117.434	117.010	0.007	2.53	42.00	0.123	0.202	0.50	0.456	2.056	0.550	0.281	2.775	1.602	0.35	OK	OK	OK
Drain Outlet at culvert at 39+780																							
		610																					
39790	39[illegible]0	100	↓	117.699	117.086	117.099	116.445	0.007	7.53	33.33	0.205	0.100	0.50	0.360	1.745	0.440	0.237	2.383	0.987	0.13	OK	OK	OK
3989[illegible]	39990	100	↓	117.086	116.736	116.445	116.055	0.004	7.53	33.33	0.205	0.201	0.50	0.454	1.859	0.481	0.253	1.925	0.907	0.11	OK	OK	OK
3999[illegible]	40090	100	↓	116.736	116.499	116.055	115.778	0.003	7.53	33.33	0.205	0.301	0.50	0.533	1.974	0.521	0.270	1.690	0.899	0.11	OK	OK	OK
[illegible]	40190	100	↓	116.499	116.262	115.778	115.500	0.003	7.53	33.33	0.205	0.401	0.50	0.603	2.088	0.561	0.285	1.756	1.046	0.15	OK	OK	OK
[illegible]190	40290	100	↓	116.262	115.875	115.500	115.073	0.004	7.53	33.33	0.205	0.502	0.50	0.668	2.202	0.602	0.301	2.259	1.497	0.30	OK	OK	OK
40290	40400	110	↓	115.875	115.180	115.073	114.330	0.007	7.53	33.33	0.226	0.612	0.50	0.735	2.338	0.650	0.320	2.956	2.210	0.66	OK	OK	OK
END of RCC Drain																							

MANAGER (TECH)
Bihar State Road Devp. Corp. Ltd.
PIU, Nawada

DGM (Tech)
Bihar State Road Devp. Corp. Ltd.
PIU, Nawada

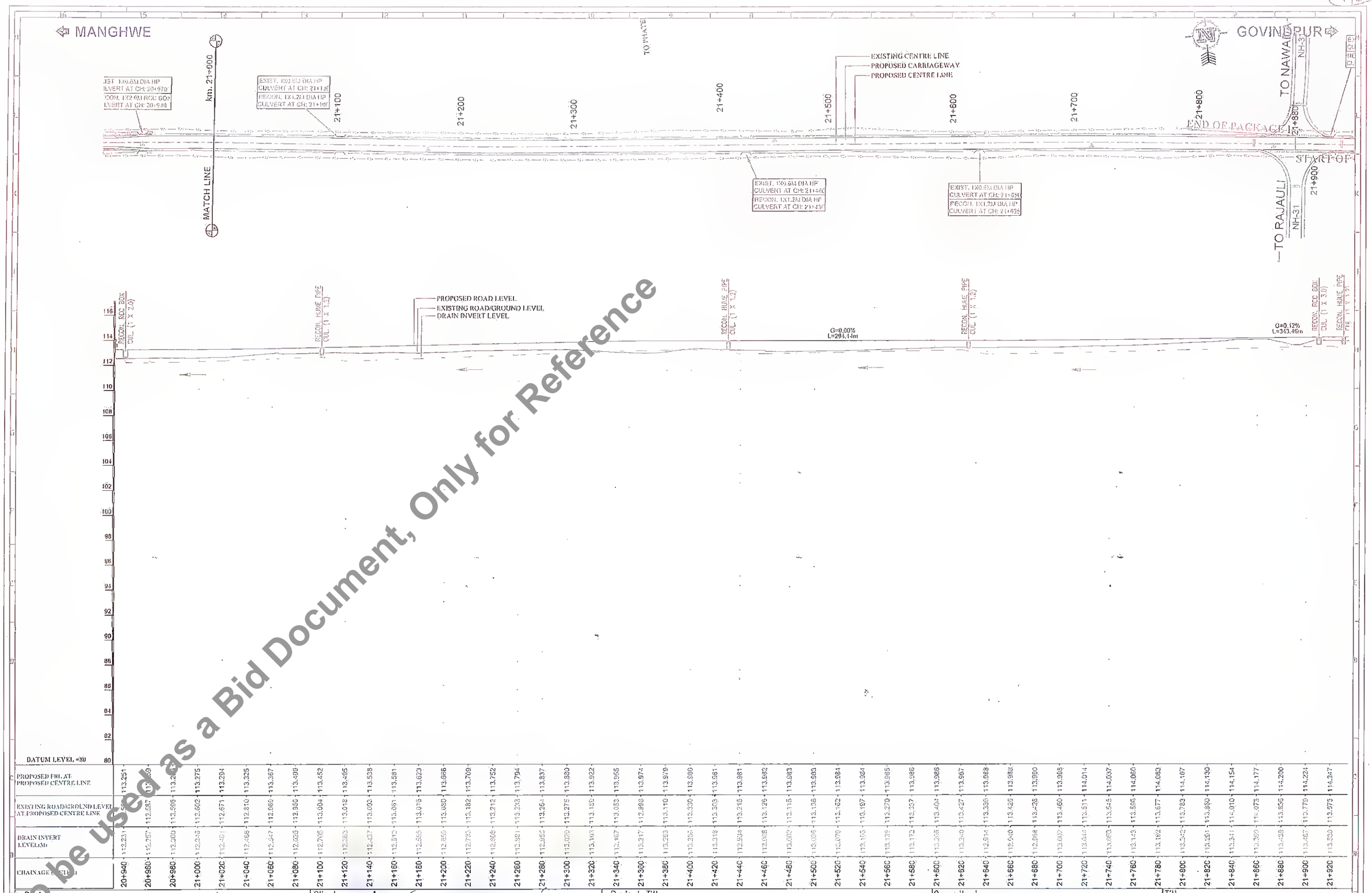

Rev.	Date	Description	Drawn	Checked	Approved

Client: Bihar State Road Development Corporation Ltd.

Bihar State Road Devp. Corp. Ltd, PIU, Nawada

Project Title : CONSULTANCY SERVICES FOR PREPARATION OF DETAILED PROJECT REPORT (DPR) FOR SH-103 (MANGHWE- GOVINDPUR)

Consultant: HOLTEC CONSULTING PRIVATE LIMITED

Designed	Checked	Approved
SA	SA	JIG
Drawn	Scale	Date
SVR	NTS	DEC. - 2021

Title : RCC DRAIN PLAN & PROFILE Km. 20+240 To Km. 21+920

Drawing No. HOL/BSRDCL/DPR/13510/DPP | Rev. R0 | Sheet 07 | A3

CAD File Ref :

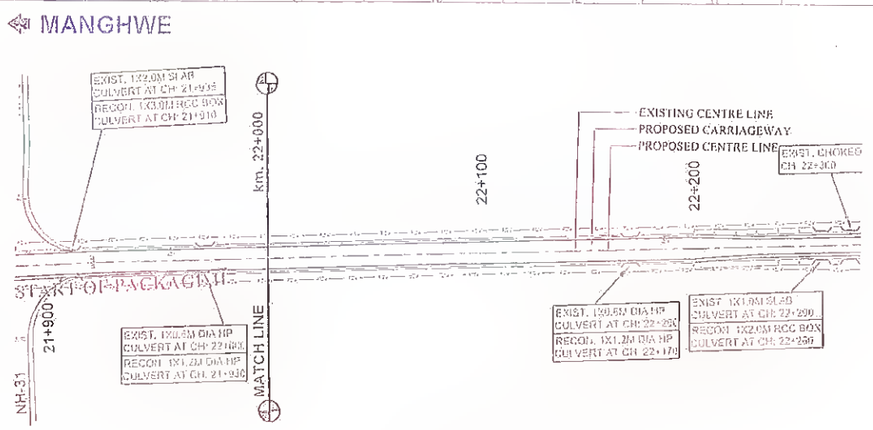

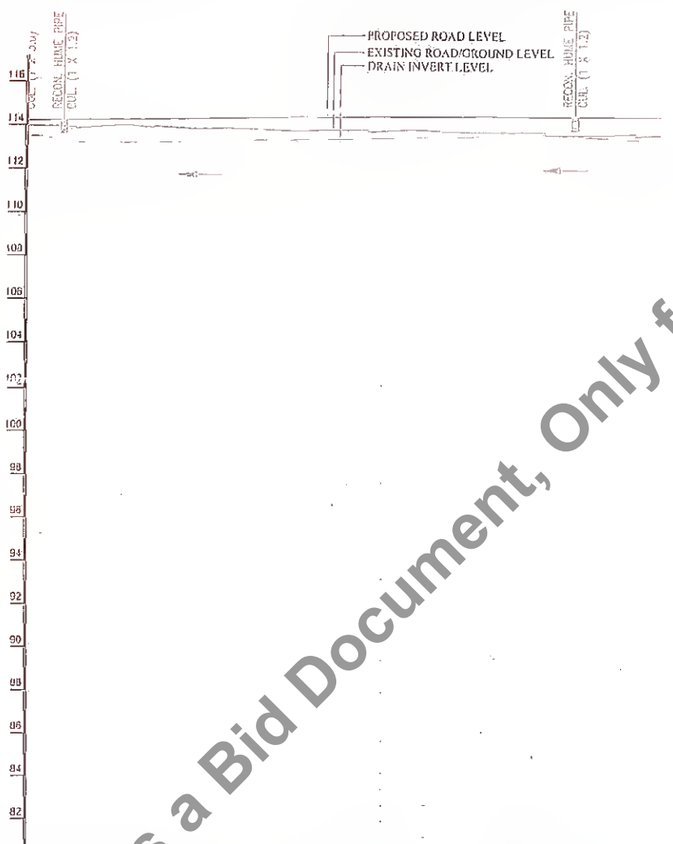

CHAINAGE (M)	21+920	21+940	21+960	21+980	22+000	22+020	22+040	22+060	22+080	22+100	22+120	22+140	22+160	22+180	22+200
PROPOSED FRL AT PROPOSED CENTRE LINE	114.217	114.270	[illegible]	114.317	114.341	114.364	114.387	114.411	114.434	114.456	114.457	114.456	114.453	114.450	114.447
EXISTING ROAD/GROUND LEVEL AT PROPOSED CENTRE LINE	113.673	113.9[illegible]	114.033	113.937	113.837	113.854	113.797	113.852	113.794	113.831	113.744	113.735	113.594	113.589	113.591
DRAIN INVERT LEVEL (M)	113.5[illegible]	113.223	113.255	113.295	113.331	113.367	113.402	113.439	113.475	113.511	113.523	113.755	113.611	113.624	113.407

LEGEND

DIRECTION OF WATER FLOW

Revision					
Rev.	Date:	Description	Drawn	Checked	Approved

Client:

Bihar State Road Development Corporation Ltd.
Bihar State Road Devp. Corp. Ltd.
PIU, Nawada

Project Title :
CONSULTANCY SERVICES FOR PREPARATION OF DETAILED PROJECT REPORT (DPR) FOR SH-103 (MANGHWE- GOVINDPUR)

Consultant: HOLTEC CONSULTING PRIVATE LIMITED

Designed	Checked	Approved
SA	SA	JIG
Drawn: SVR	Scale: NTS	Date: DEC. - 2021

Title :
RCC DRAIN PLAN & PROFILE
Km. 21+920 To Km. 22+200

Drawing No: HOL/BSRDCL/DPR/13510/DPP
Rev. R0
Sheet 08
CAD File Ref.:
A3

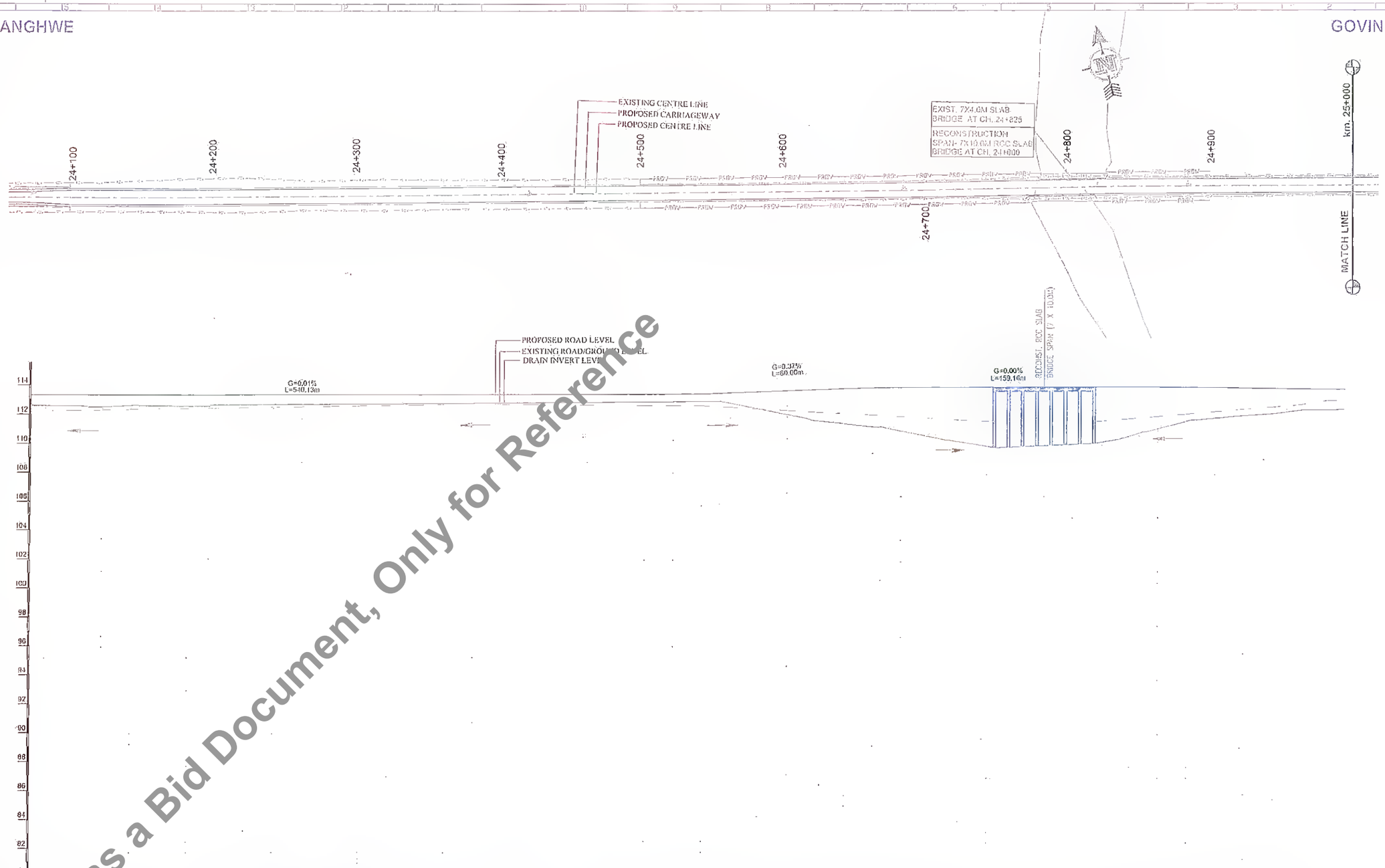

CHAINAGE (M)	DATUM LEVEL = 80	PROPOSED FRL AT PROPOSED CENTRE LINE	EXISTING ROAD/GROUND LEVEL AT PROPOSED CENTRE LINE	DRAIN INVERT LEVEL(M)
24+100	112.251	113.328	[illegible]	112.251
24+120	112.282	113.330	112.578	112.282
24+140	112.313	113.332	112.506	112.313
24+160	112.344	113.333	112.501	112.344
24+180	112.375	113.334	112.566	112.375
24+200	112.407	113.335	112.555	112.407
24+220	112.437	113.337	112.615	112.437
24+240	112.468	113.338	112.648	112.468
24+260	112.500	113.340	112.682	112.500
24+280	112.530	113.341	112.675	112.530
24+300	112.562	113.343	112.689	112.562
24+320	112.593	113.344	112.702	112.593
24+340	112.624	113.346	112.715	112.624
24+360	112.655	113.347	112.729	112.655
24+380	112.687	113.349	112.742	112.687
24+400	112.703	113.350	112.756	112.703
24+420	112.734	113.351	112.769	112.734
24+440	112.766	113.353	112.782	112.766
24+460	112.847	113.354	112.795	112.847
24+480	112.929	113.356	112.809	112.929
24+500	112.910	113.357	112.822	112.910
24+520	112.892	113.359	112.835	112.892
24+540	112.873	113.360	112.848	112.873
24+560	112.561	113.362	112.861	112.561
24+580	112.470	113.437	112.741	112.470
24+600	112.359	113.508	112.343	112.359
24+620	112.248	113.581	111.945	112.248
24+640	112.137	113.654	111.522	112.137
24+660	112.026	113.724	111.309	112.026
24+680	111.915	113.773	111.096	111.915
24+700	111.804	113.797	110.883	111.804
24+720	111.694	113.800	110.396	111.694
24+740	111.583	113.800	110.066	111.583
24+760	111.472	113.800	109.745	111.472
24+780	111.361	113.800	109.762	111.361
24+800	111.250	113.800	109.781	111.250
24+820	111.229	113.800	109.860	111.229
24+840	111.187	113.800	110.018	111.187
24+860	111.146	113.800	110.424	111.146
24+880	111.104	113.799	110.954	111.104
24+900	111.062	113.789	111.439	111.062
24+920	112.150	113.770	111.659	112.150
24+940	112.279	113.744	111.829	112.279
24+960	112.437	113.719	111.984	112.437
24+980	112.595	113.689	112.199	112.595
25+000	112.914	113.661	112.253	112.914

Revision

Rev.	Date	Description	Drawn	Checked	Approved

Client:

Bihar State Road Development Corporation Ltd.
Bihar State Road Devp. Corp. Ltd.
PIU, Nawada

Project Title :

CONSULTANCY SERVICES FOR PREPARATION OF DETAILED PROJECT REPORT (DPR) FOR SH-103 (MANGHWE- GOVINDPUR)

Consultant:

HOLTEC CONSULTING PRIVATE LIMITED

Designed	Checked	Approved
SA	SA	JIG
Drawn: SVR	Scale: NTS	Date: DEC. - 2021

Title :

RCC DRAIN PLAN & PROFILE
Km. 24+100 To Km. 25+000

Drawing No. HOL/BSRDCL/DPR/13510/DPP | Rev. R0 | Sheet 09 | A3

CAD File Ref :

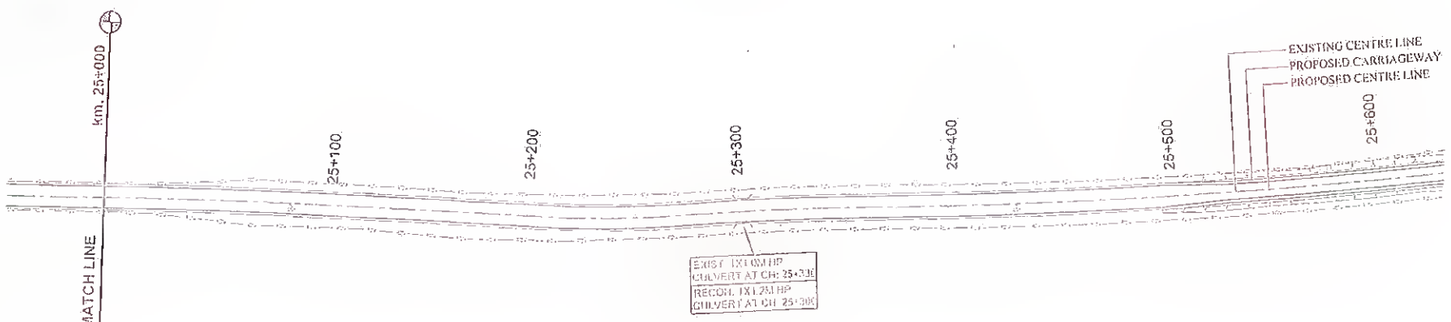

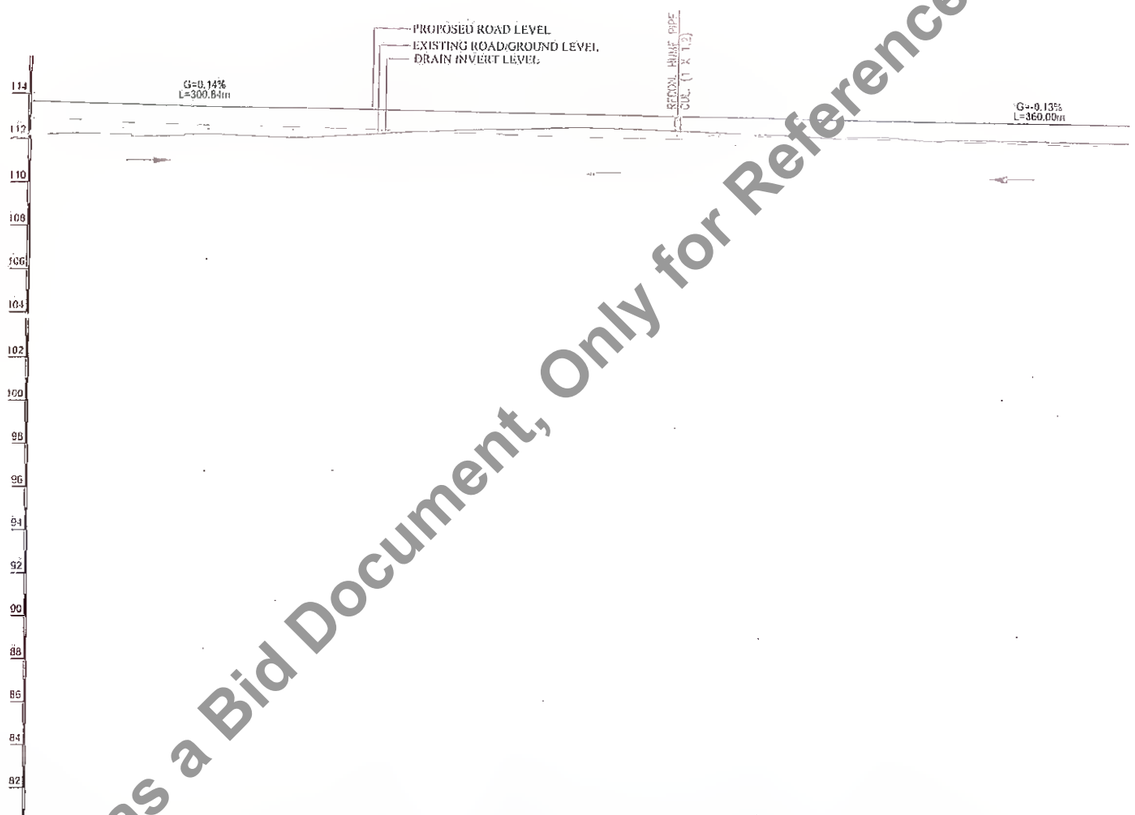

CHAINAGE (METER)	PROPOSED TRL AT PROPOSED CENTRE LINE	EXISTING ROAD/GROUND LEVEL AT PROPOSED CENTRE LINE	DRAIN INVERT LEVEL(M)
25+000	113.651	112.911	112.914
25+020	[illegible]	112.959	112.959
25+040	113.606	112.956	112.917
25+060	113.579	112.187	112.759
25+080	113.551	112.253	112.721
25+100	113.524	112.207	112.679
25+120	113.496	112.121	112.624
25+140	113.468	112.214	112.576
25+160	113.441	112.544	112.528
25+180	113.413	112.455	112.479
25+200	113.386	112.544	112.432
25+220	113.359	112.574	112.383
25+240	113.331	112.645	112.335
25+260	113.304	112.693	112.286
25+280	113.278	112.635	112.241
25+300	113.253	112.576	112.206
25+320	113.227	112.516	112.182
25+340	113.202	112.469	112.139
25+360	113.177	112.401	112.077
25+380	113.151	112.351	112.030
25+400	113.126	112.303	112.004
25+420	113.101	112.214	112.035
25+440	113.076	112.250	112.102
25+460	113.050	112.230	112.145
25+480	113.025	112.192	112.035
25+500	113.000	112.169	112.002

LEGEND

DIRECTION OF WATER FLOW

Revision					
Rev.	Date:	Description	Drawn	Checked	Approved

Client:

Bihar State Road Development Corporation Ltd.
Bihar State Road Devp. Corp. Ltd.
PIU, Nawada

Project Title :

CONSULTANCY SERVICES FOR PREPARATION OF DETAILED PROJECT REPORT (DPR) FOR SH-103 (MANGHWE- GOVINDPUR)

Consultant: HOLTEC CONSULTING PRIVATE LIMITED

Designed	Checked	Approved
SA	SA	JIG
Drawn: SVR	Scale: NTS	Date: DEC. - 2021

Title : RCC DRAIN PLAN & PROFILE Km. 25+000 To Km. 25+500

Drawing No. HOL/BSRDCL/DPR/13510/DPP | Rev. R0 | Sheet 10

CAD File Ref : | A3

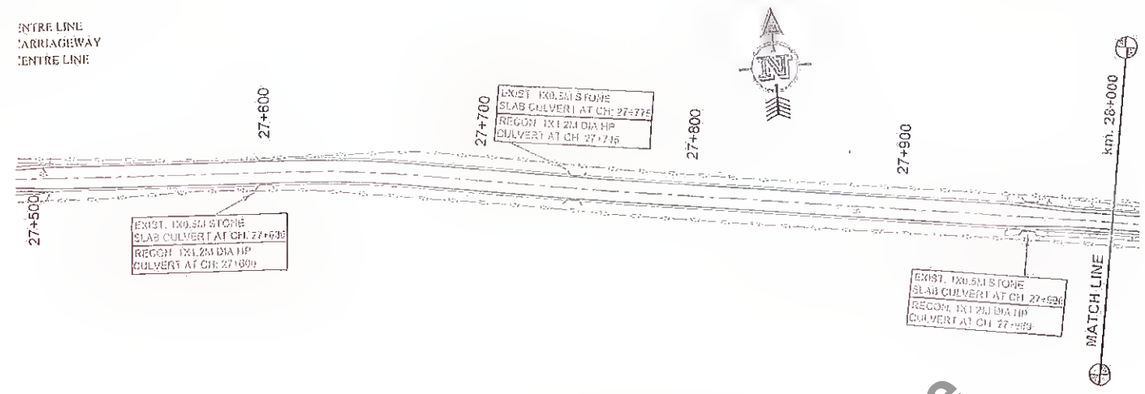

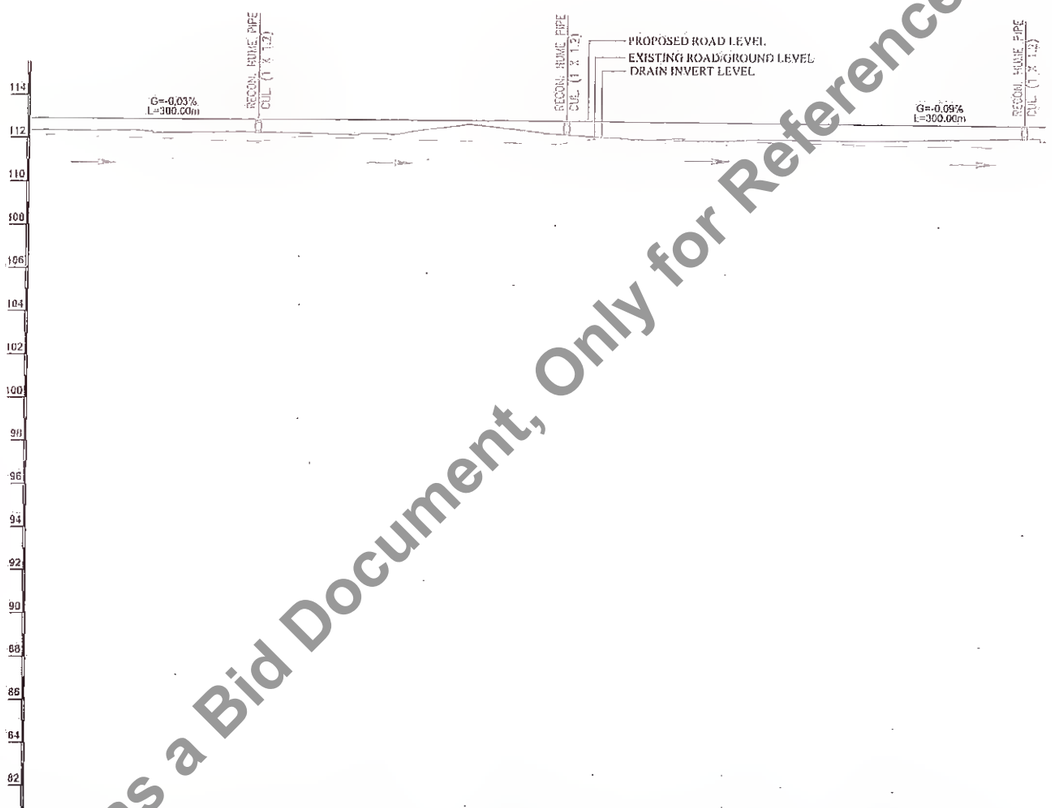

CHAINAGE (METERS)	PROPOSED FRL AT PROPOSED CENTRE LINE	EXISTING ROAD/GROUND LEVEL AT PROPOSED CENTRE LINE	DRAIN INVERT LEVEL(M)
27+500	112.925	112.966	112.179
27+520	[illegible]	112.966	112.122
27+540	112.931	112.930	112.067
27+560	112.928	112.273	112.011
27+580	112.902	112.905	111.955
27+600	112.897	112.905	111.900
27+620	112.891	112.870	112.135
27+640	112.885	112.210	112.080
27+660	112.880	112.244	112.017
27+680	112.874	112.249	111.955
27+700	112.868	112.599	111.913
27+720	112.862	112.569	111.871
27+740	112.852	112.346	111.835
27+760	112.838	112.122	112.073
27+780	112.819	111.999	112.034
27+800	112.800	112.026	111.990
27+820	112.781	111.953	111.948
27+840	112.762	112.003	111.902
27+860	112.744	111.986	111.859
27+880	112.725	111.957	111.815
27+900	112.706	111.974	111.771
27+920	112.687	112.004	111.730
27+940	112.668	112.053	111.691
27+960	112.649	112.083	111.648

LEGEND

DIRECTION OF WATER FLOW

Rev.	Date	Description	Drawn	Checked	Approved

Client: Bihar State Road Development Corporation Ltd.
Bihar State Road Devp. Corp. Ltd. PIU, Nawada

Project Title : CONSULTANCY SERVICES FOR PREPARATION OF DETAILED PROJECT REPORT (DPR) FOR SH-103 (MANGHWE- GOVINDPUR)

Consultant: HOLTEC CONSULTING PRIVATE LIMITED

Designed	Checked	Approved
SA	SA	JIS
Drawn: SVR	Scale: NTS	Date: DEC. - 2021

Title : RCC DRAIN PLAN & PROFILE Km. 27+500 To Km. 27+960

Drawing No. HOL/BSRDCL/DPR/13510/DPP | Rev. R0 | Sheet 11

CAD File Ref : | A3

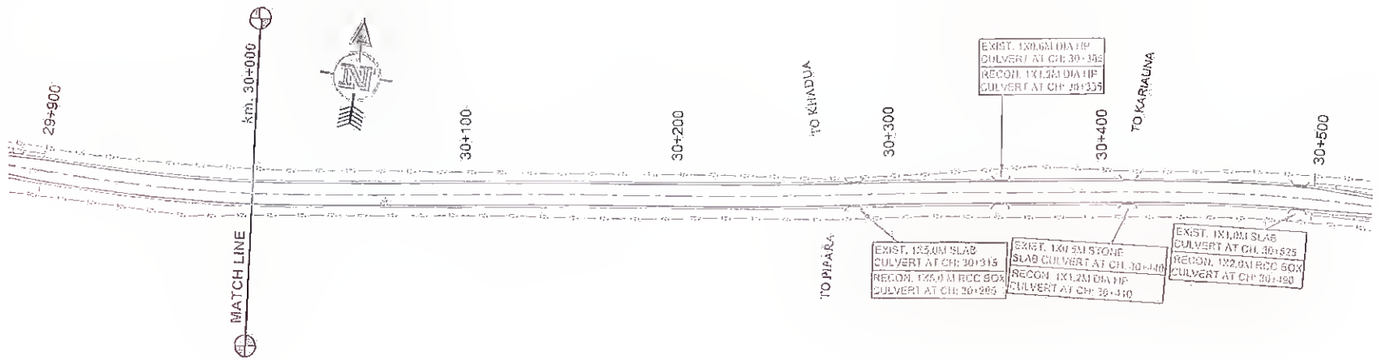

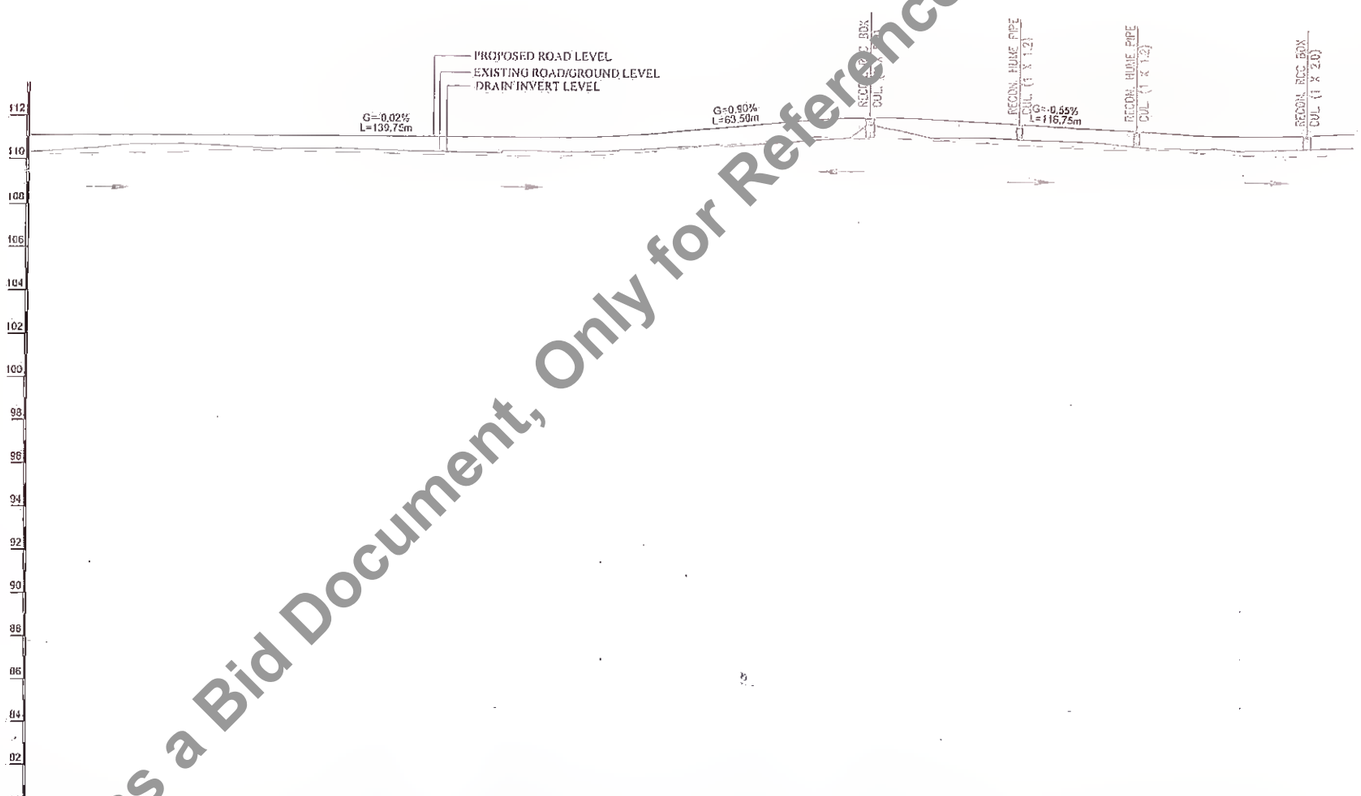

DATUM LEVEL = 80

CHAINAGE (METER)	PROPOSED FRL AT PROPOSED CENTRE LINE	EXISTING ROAD/GROUND LEVEL AT PROPOSED CENTRE LINE	DRAIN INVERT LEVEL(M)
29+900	111.093	110.548	110.348
29+920	111.[illegible]	110.549	110.[illegible]
29+940	111.[illegible]	110.692	110.[illegible]
29+960	111.137	110.741	110.305
29+980	111.141	110.670	110.[illegible]
30+000	111.138	110.557	110.462
30+020	111.135	110.534	110.420
30+040	111.132	110.549	110.309
30+060	111.129	110.482	110.267
30+080	111.125	110.448	110.235
30+100	111.120	110.423	110.203
30+120	111.119	110.490	110.172
30+140	111.124	110.477	110.264
30+160	111.182	110.503	110.256
30+180	111.301	110.604	110.289
30+200	111.474	110.741	110.400
30+220	111.653	110.774	110.403
30+240	111.832	110.821	110.470
30+260	112.005	111.062	111.231
30+280	112.105	111.511	111.156
30+300	112.107	111.485	111.164
30+320	112.019	111.185	111.194
30+340	111.909	111.217	110.964
30+360	111.799	111.136	110.822
30+380	111.689	111.057	110.752
30+400	111.579	110.954	110.622
30+420	111.469	110.726	110.792
30+440	111.367	110.794	110.570
30+460	111.322	110.639	110.475
30+480	111.342	110.703	110.445
30+500	111.418	110.786	110.471

LEGEND

DIRECTION OF WATER FLOW

Rev.	Date:	Description	Drawn	Checked	Approved

Client:

Bihar State Road Development Corporation Ltd.

DGM (Tech) Bihar State Road Devp. Corp. Ltd. PIU, Nawada

MANAGING DIRECTOR Bihar State Road Devp. Corp. Ltd. PIU, Nawada

Project Title : CONSULTANCY SERVICES FOR PREPARATION OF DETAILED PROJECT REPORT (DPR) FOR SH-103 (MANGHWE- GOVINDPUR)

Consultant: HOLTEC CONSULTING PRIVATE LIMITED

Designed	Checked	Approved
SA	SA	JIG
Drawn: SVR	Scale: NTS	Date: DEC. - 2021

CAD File Ref :

Title : RCC DRAIN PLAN & PROFILE Km. 39+900 To Km. 30+500

Drawing No. HOL/BSRDCL/DPR/13510/DPP | Rev. R0 | Sheet 12 | A3

MANGHWE

GOVINDPUR

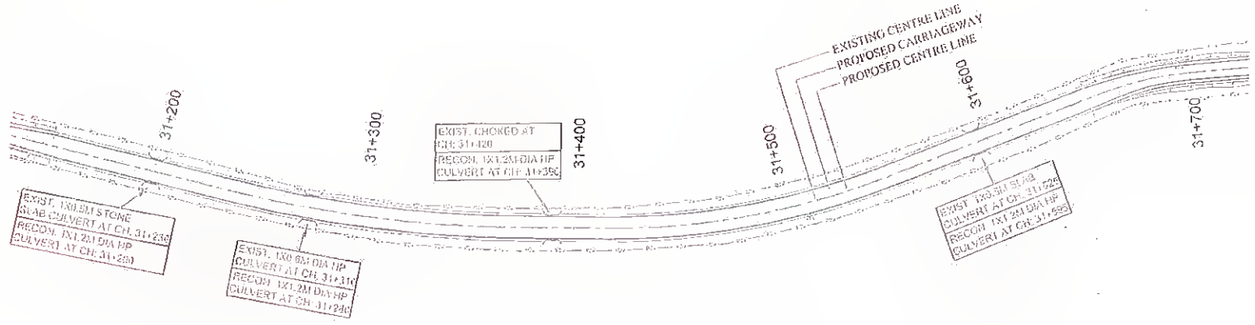

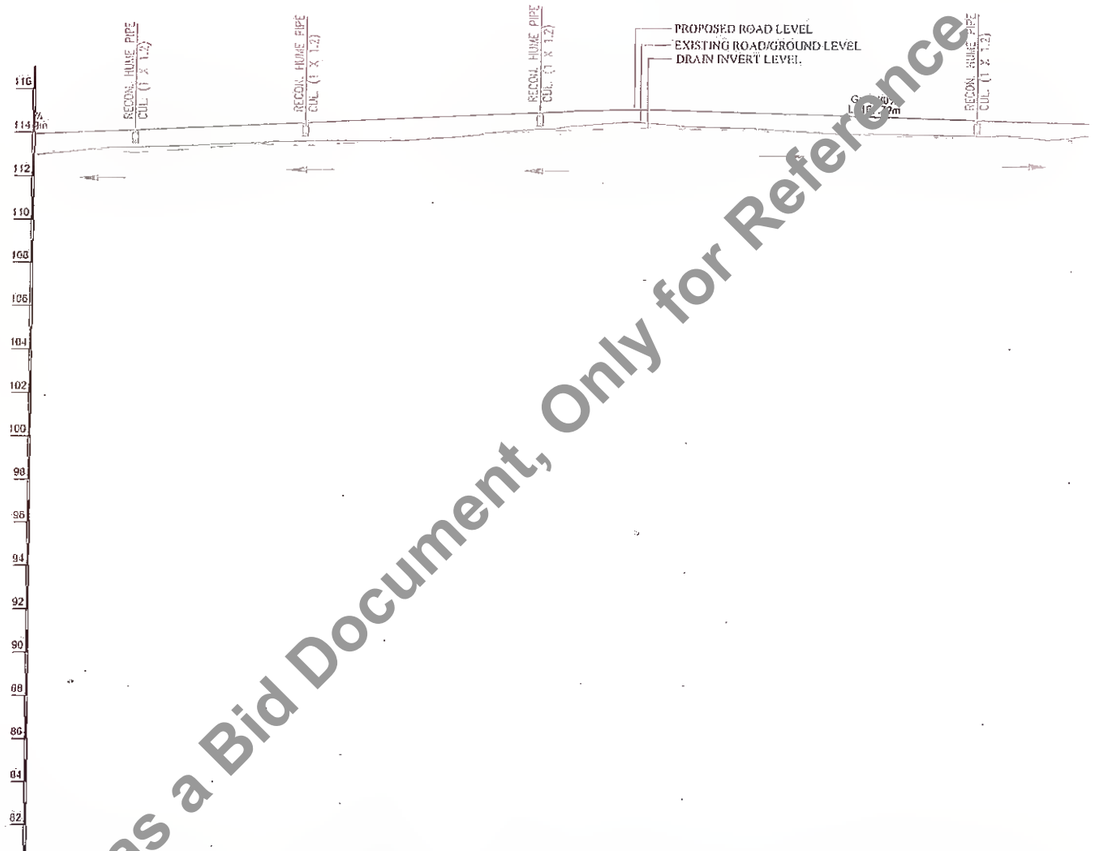

CHAINAGE (m)	PROPOSED FRL AT PROPOSED CENTRE LINE	EXISTING ROAD/GROUND LEVEL AT PROPOSED CENTRE LINE	DRAIN INVERT LEVEL (m)
31+160	113.976	113.153	113.154
31+180	113.946	113.249	113.290
31+200	114.166	113.365	113.119
31+220	114.261	113.430	113.271
31+240	114.356	113.520	113.423
31+260	114.451	113.610	113.578
31+280	114.546	113.689	113.490
31+300	114.641	113.720	113.934
31+320	114.736	113.736	113.769
31+340	114.831	113.838	113.904
31+360	114.926	114.005	114.039
31+380	115.021	114.235	114.174
31+400	115.116	114.335	114.250
31+420	115.192	114.552	114.350
31+440	115.216	114.583	114.430
31+460	115.189	114.555	114.373
31+480	115.129	114.382	114.310
31+500	115.069	114.308	114.246
31+520	115.009	114.206	114.197
31+540	114.949	114.127	114.135
31+560	114.889	114.139	114.054
31+580	114.829	114.049	114.002
31+600	114.769	114.061	114.072
31+620	114.709	113.995	113.995
31+640	114.653	114.013	113.925

LEGEND

DIRECTION OF WATER FLOW

Rev.	Date	Description	Drawn	Checked	Approved

Client:

Bihar State Road Development Corporation Ltd.

DGM (Tech)

Bihar State Road Devp. Corp. Ltd. Nawada

Bihar State Road Devp. Corp. Ltd. PIU, Nawada

Project Title :

CONSULTANCY SERVICES FOR PREPARATION OF DETAILED PROJECT REPORT (DPR) FOR SH-103 (MANGHWE- GOVINDPUR)

Consultant: HOLTEC CONSULTING PRIVATE LIMITED

Designed	Checked	Approved
SA	SA	JRG
Drawn: SVR	Scale: NTS	Date: DEC. - 2021

Title : RCC DRAIN PLAN & PROFILE Km. 31+160 To Km. 31+640

Drawing No. HOL/BSRDCL/DPR/13510/DPP | Rev. R0 | Sheet 13 | A3

CAD File Ref :

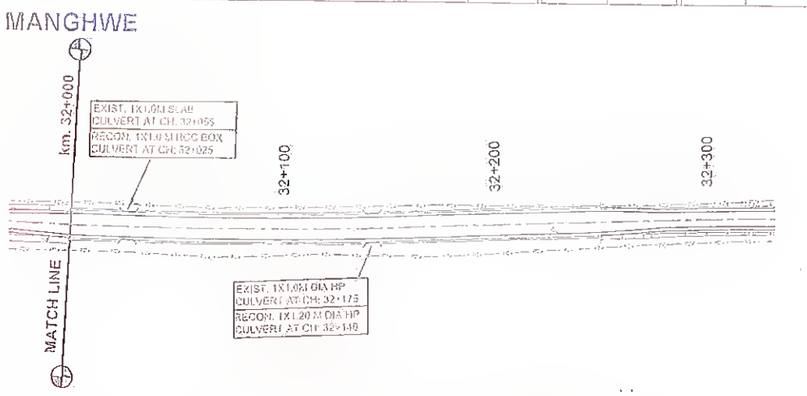

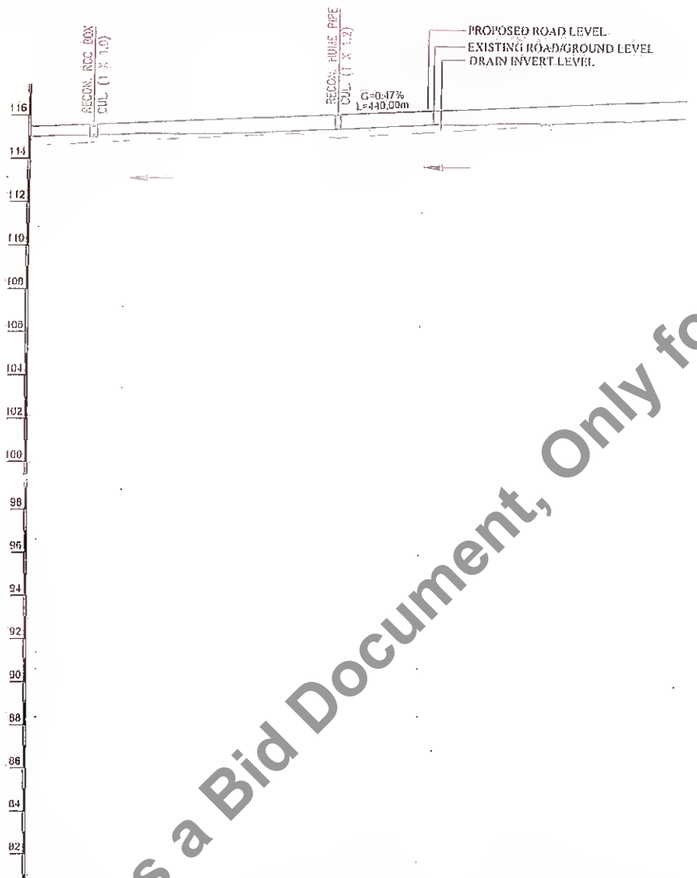

DATUM LEVEL = 80																				
PROPOSED FGL AT PROPOSED CENTRE LINE	115.503	[illegible]	[illegible]	115.787	115.882	115.977	116.072	116.167	116.262	116.357	116.452	116.547	116.642	116.737	116.832	116.927
EXISTING ROAD/GROUND LEVEL AT PROPOSED CENTRE LINE	115.025	[illegible]	115.173	115.218	115.246	115.254	115.393	115.502	115.610	115.724	115.749	115.820	115.826	115.928	115.960	116.119
DRAIN INVERT LEVEL(M)	[illegible]	[illegible]	[illegible]	[illegible]	115.099	115.306	115.317	115.120	115.258	115.350	115.525	115.669	115.706			
CHAINAGE (M)	32+000	32+020	32+040	32+060	32+080	32+100	32+120	32+140	32+160	32+180	32+200	32+220	32+240	32+260	32+280	32+300

LEGEND

DIRECTION OF WATER FLOW

Revision					
Rev.	Date:	Description	Drawn	Checked	Approved

Client: Bihar State Road Development Corporation Ltd., Nawada

Project Title : CONSULTANCY SERVICES FOR PREPARATION OF DETAILED PROJECT REPORT (DPR) FOR SH-103 (MANGHWE- GOVINDPUR)

Consultant: HOLTEC CONSULTING PRIVATE LIMITED

Designed	Checked	Approved
SA	SA	JIG
Drawn	Scale	Date
SVR	NTS	DEC. - 2021

Title : RCC DRAIN PLAN & PROFILE Km. 32+000 To Km. 32+240

Drawing No. HOL/BSRDCL/DPR/13510/DPP | Rev. R0 | Sheet 14

CAD File Ref : | A3

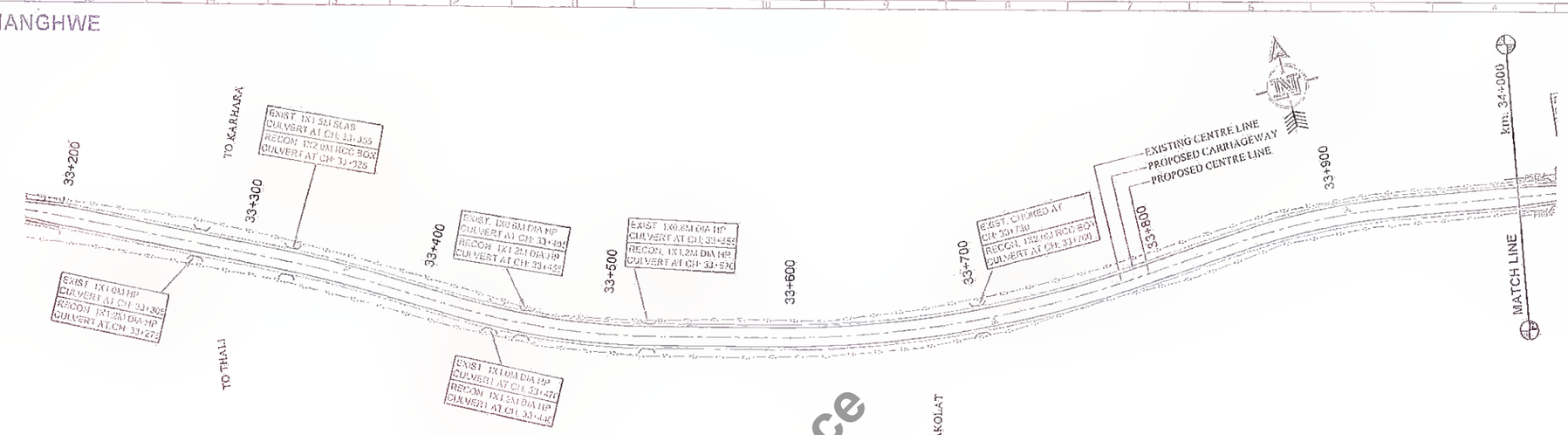

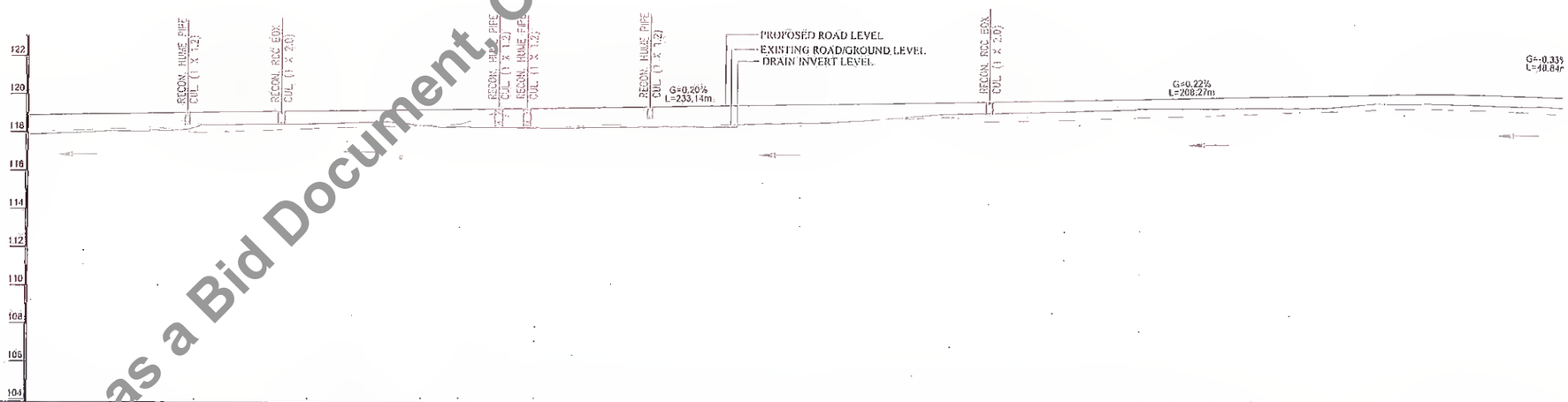

CHAINAGE (M)	PROPOSED FRL AT PROPOSED CENTRE LINE	EXISTING ROAD/GROUND LEVEL AT PROPOSED CENTRE LINE	DRAIN INVERT LEVEL (M)
33+200	118.924	118.977	118.077
33+220	118.964	118.949	118.149
33+240	119.004	119.023	118.219
33+260	119.039	119.122	118.289
33+280	119.077	119.322	118.348
33+300	119.115	119.456	118.424
33+320	119.153	119.487	118.499
33+340	119.191	119.517	118.575
33+360	119.229	119.585	118.650
33+380	119.268	119.657	118.727
33+400	119.308	119.434	118.804
33+420	119.348	119.433	118.882
33+440	119.389	119.367	118.962
33+460	119.429	119.390	119.042
33+480	119.470	119.405	119.123
33+500	119.510	119.458	119.203
33+520	119.551	119.516	119.284
33+540	119.591	119.517	119.361
33+560	119.632	119.522	119.440
33+580	119.672	119.697	119.737
33+600	119.713	119.735	119.818
33+620	119.753	119.869	119.894
33+640	119.794	119.972	119.972
33+660	119.835	119.960	120.050
33+680	119.877	119.970	120.130
33+700	119.921	119.914	120.210
33+720	119.965	119.981	120.045
33+740	120.008	120.055	120.076
33+760	120.054	120.511	120.098
33+780	120.099	120.623	120.199
33+800	120.143	120.638	120.232
33+820	120.187	120.631	120.303
33+840	120.231	120.638	120.374
33+860	120.276	120.652	120.417
33+880	120.320	120.704	120.513
33+900	120.365	120.675	120.590
33+920	120.409	120.656	120.659
33+940	120.416	120.637	120.654
33+960	120.389	120.644	120.699
33+980	120.329	120.721	120.510
34+000	120.264	120.753	120.417

LEGEND

DIRECTION OF WATER FLOW

Rev.	Date:	Description	Drawn	Checked	Approved

Client: Bihar State Road Development Corporation Ltd.

Project Title : CONSULTANCY SERVICES FOR PREPARATION OF DETAILED PROJECT REPORT (DPR) FOR SH-103 (MANGHWE- GOVINDPUR)

Consultant: HOLTEC CONSULTING PRIVATE LIMITED

Designed	Checked	Approved
SA	SA	JIG
Drawn: SVR	Scale: HTS	Date: DEC. - 2021

Title : RCC DRAIN PLAN & PROFILE Km. 33+200 To Km. 34+000

Drawing No. HOL/BSRDCL/DPR/13510/DPP | Rev. R0 | Sheet 15 | A3

CAD File Ref :

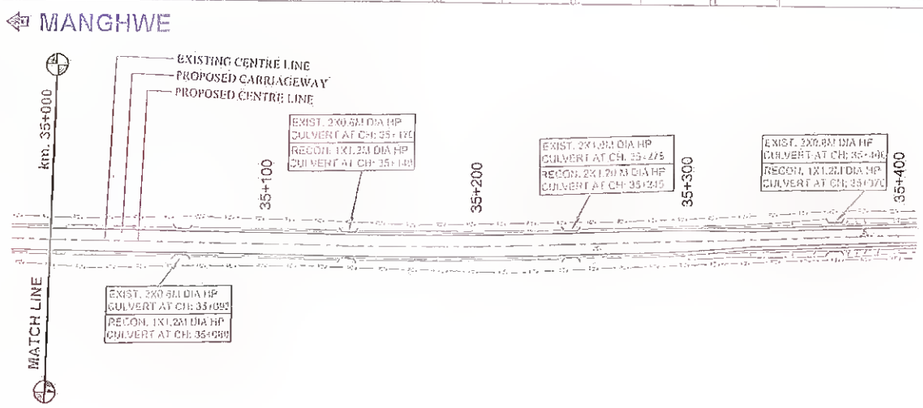

DATUM LEVEL = 104

CHAINAGE	PROPOSED RL AT PROPOSED CENTRE LINE	EXISTING ROAD/GROUND LEVEL AT PROPOSED CENTRE LINE	DRAIN INVERT LEVEL
34+960	122.712	121.875	
34+980	122.864	122.137	
35+000	123.016	122.419	
35+020	123.169	122.859	
35+040	123.319	123.052	
35+060	123.518	122.871	
35+080	123.645	123.055	
35+100	123.815	123.169	
35+120	123.970	123.252	
35+140	124.102	123.128	
35+160	124.139	123.209	
35+180	124.175	123.290	
35+200	124.212	123.371	
35+220	124.249	123.452	
35+240	124.285	123.533	
35+260	124.322	124.021	
35+280	124.355	124.016	
35+300	124.392	124.015	
	124.339	123.570	
	124.200	123.675	

LEGEND

DIRECTION OF WATER FLOW

Rev.	Date:	Description	Drawn	Checked	Approved

Client: Bihar State Road Development Corporation Ltd.

MANAGER (TECH)
Bihar State Road Devp. Corp. Ltd
PIU, Nawada

Project Title : CONSULTANCY SERVICES FOR PREPARATION OF DETAILED PROJECT REPORT (DPR) FOR SH-103 (MANGHWE- GOVINDPUR)

Consultant: HOLTEC CONSULTING PRIVATE LIMITED

Designed	Checked	Approved
SA	SA	JIG
Drawn: SVR	Scale: NTS	Date: DEC. - 2021

Title : RCC DRAIN PLAN & PROFILE Km. 34+960 To Km. 35+300

Drawing No. HOL/BSRDCL/DPR/13510/DPP | Rev. R0 | Sheet 16

CAD File Ref : | A3

MANGHWE

GOVINDPUR

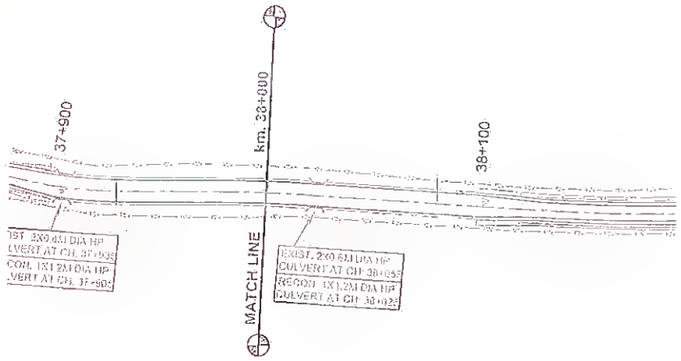

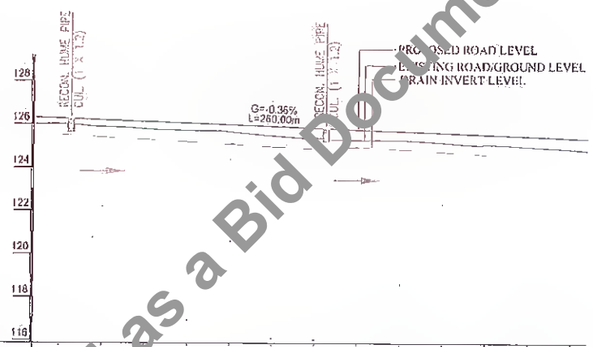

CHAINAGE (M)	37+900	37+920	37+940	37+960	37+980	38+000	38+020	38+040	38+060	38+080	38+100	38+120	38+140
PROPOSED FRL AT PROPOSED CENTRE LINE	126.280	[illegible]	126.139	126.064	125.992	125.920	125.848	125.776	125.704	125.632	125.561	125.489	125.415
EXISTING ROAD/GROUND LEVEL AT PROPOSED CENTRE LINE	[illegible]	125.694	125.793	125.712	125.690	125.591	125.396	125.296	125.292	125.132	125.114	125.012	124.985
DRAIN INVERT LEVEL (M)	125.534	125.427	125.322	125.217	125.111	125.006	124.901	125.007	124.892	124.776	124.661		

LEGEND

DIRECTION OF WATER FLOW

Rev.	Date	Description	Drawn	Checked	Approved

Client:

Bihar State Road Development Corporation Ltd

DGM (Tech) Bihar State Road Devp. Corp. Ltd. Nawada

Bihar State Road Devp. Corp. Ltd. PIU, Nawada

Project Title : CONSULTANCY SERVICES FOR PREPARATION OF DETAILED PROJECT REPORT (DPR) FOR SH-103 (MANGHWE- GOVINDPUR)

Consultant: HOLTEC CONSULTING PRIVATE LIMITED

Designed	Checked	Approved
SA	SA	JIG
Drawn: SVH	Scale: NTS	Date: DEC. - 2021

Title : RCC DRAIN PLAN & PROFILE Km. 37+900 To Km. 38+100

Drawing No. HOL/BSRDCL/DPR/13510/DPP | Rev. R0 | Sheet 17 | A3

E/O File Ref :

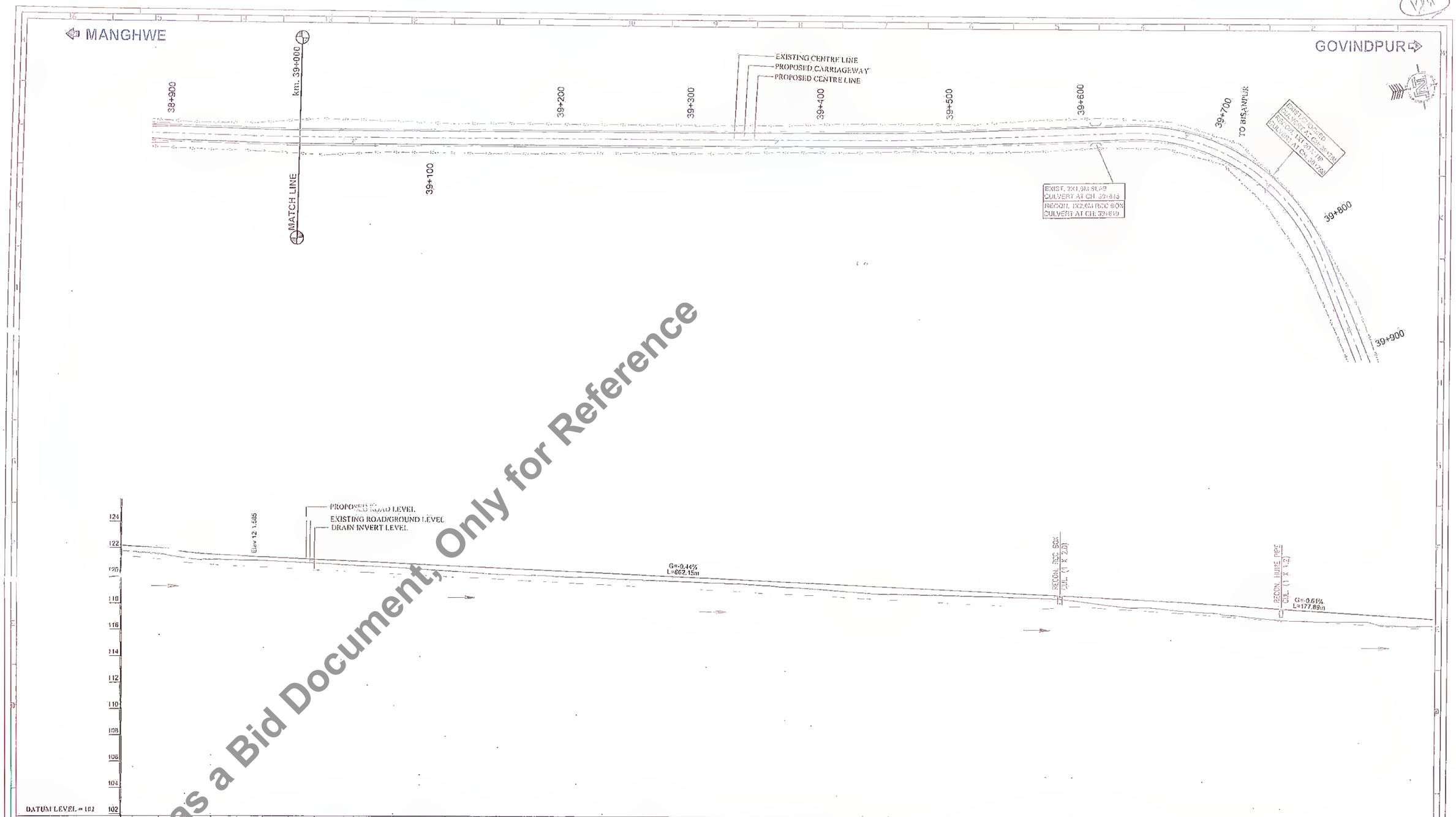

CHAINAGE (m)	PROPOSED RL AT PROPOSED CENTRE LINE	EXISTING ROAD/GROUND LEVEL AT PROPOSED CENTRE LINE	DRAIN INVERT LEVEL (M)
38+900	122.134	121.397	121.397
38+920	121.995	121.546	121.046
38+940	121.856	121.403	121.036
38+960	121.736	121.338	120.987
38+980	121.631	121.306	121.035
39+000	121.540	121.252	120.757
39+020	121.451	121.151	120.651
39+040	121.362	121.052	120.595
39+060	121.273	120.951	120.594
39+080	121.184	120.849	120.373
39+100	121.095	120.741	120.277
39+120	121.006	120.624	120.181
39+140	120.918	120.508	120.098
39+160	120.829	120.375	119.990
39+180	120.740	120.250	119.894
39+200	120.651	120.186	119.798
39+220	120.562	120.135	119.702
39+240	120.473	120.041	119.606
39+260	120.384	119.978	119.510
39+280	120.295	119.863	119.414
39+300	120.206	119.826	119.318
39+320	120.117	119.762	119.222
39+340	120.028	119.678	119.126
39+360	119.939	119.570	119.030
39+380	119.851	119.506	118.934
39+400	119.763	119.364	118.838
39+420	119.675	119.353	118.742
39+440	119.587	119.104	118.646
39+460	119.499	118.960	118.550
39+480	119.406	118.893	118.454
39+500	119.317	118.844	118.358
39+520	119.228	118.802	118.262
39+540	119.139	118.750	118.166
39+560	119.050	118.724	118.070
39+580	118.961	118.667	117.974
39+600	118.872	118.617	117.878
39+620	118.783	118.471	117.782
39+640	118.695	118.208	117.686
39+660	118.606	117.984	117.590
39+680	118.506	117.843	117.494
39+700	118.396	117.761	117.374
39+720	118.275	117.610	117.334
39+740	118.153	117.419	117.254
39+760	118.030	117.228	117.151
39+780	117.907	117.064	117.010
39+800	117.785	116.997	117.034
39+820	117.662	116.931	116.932
39+840	117.540	116.863	116.772
39+860	117.417	116.702	116.611
39+880	117.294	116.626	116.470

Revision					
Rev.	Date:	Description	Drawn	Checked	Approved

Client:

Bihar State Road Development Corporation Ltd. Nawada

Bihar State Road Devp. Corp. Ltd. PIU, Nawada

DGM (Tech) Bihar State Road Devp. Corp. Ltd.

Project Title : CONSULTANCY SERVICES FOR PREPARATION OF DETAILED PROJECT REPORT (DPR) FOR SH-103 (MANGHWE- GOVINDPUR)

Consultant: HOLTEC CONSULTING PRIVATE LIMITED

Designed	Checked	Approved
SA	SA	JIG
Drawn	Scale	Date
SVR	NTS	DEC. - 2021

Title : RCC DRAIN PLAN & PROFILE Km. 38+900 To Km. 39+880

Drawing No. HOL/BSRDCL/DPR/13510/DPP | Rev. R0 | Sheet 18

CAD File Ref : | A1

124

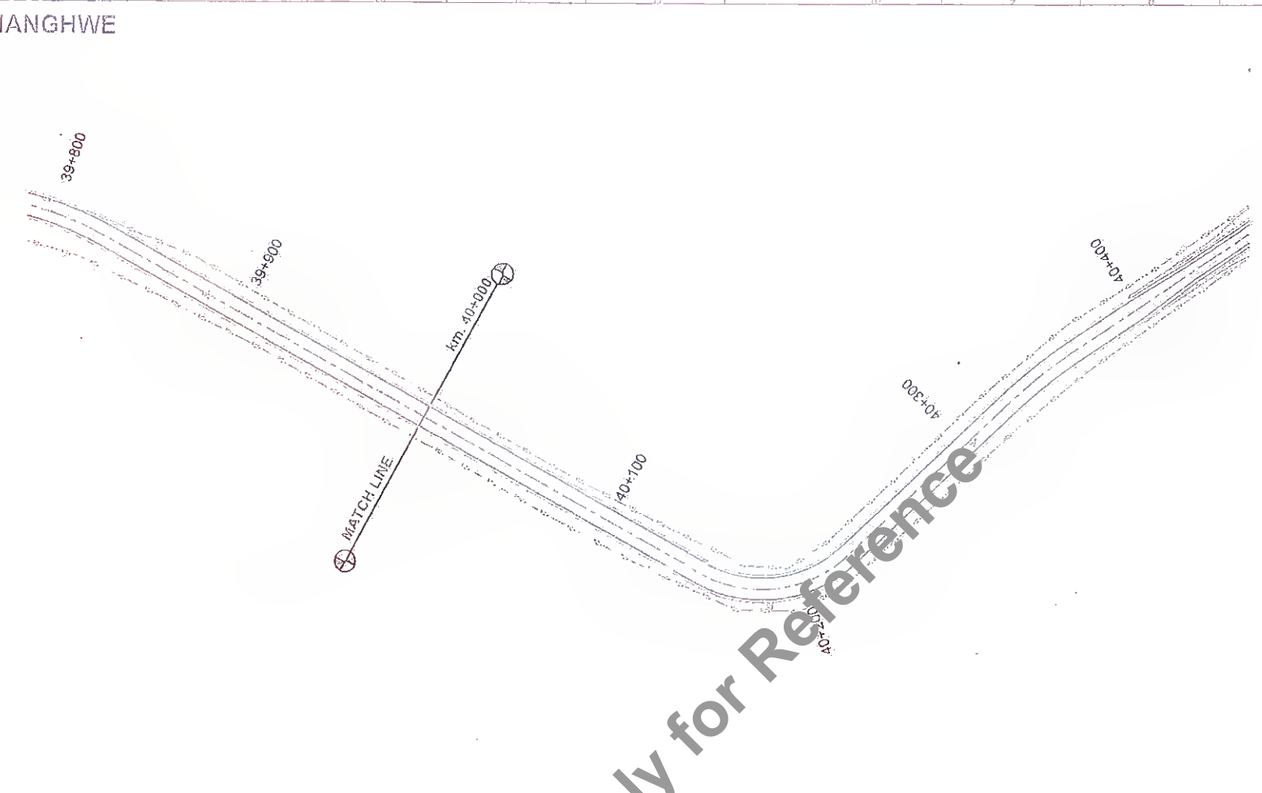

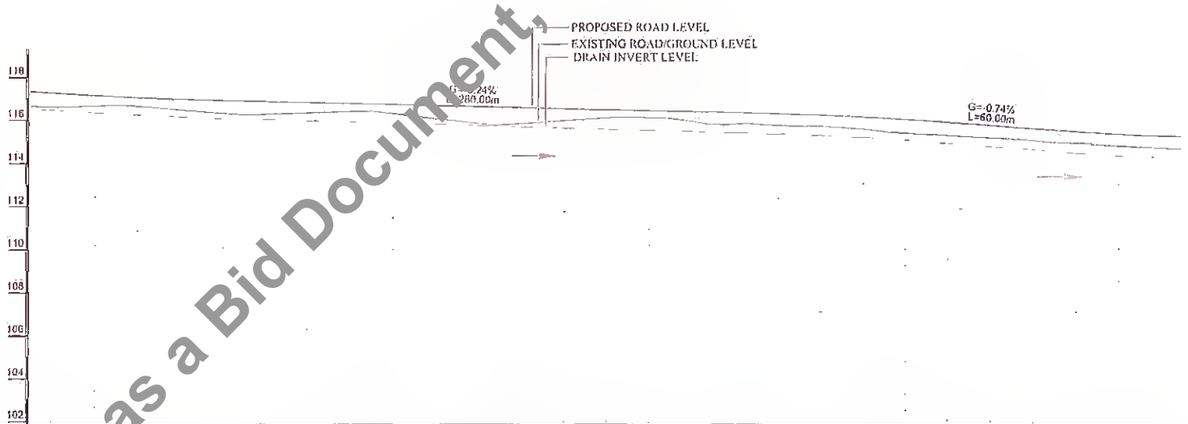

CHAINAGE (IN M)	PROPOSED DRL AT PROPOSED CENTRE LINE	EXISTING ROAD/GROUND LEVEL AT PROPOSED CENTRE LINE	DRAIN INVERT LEVEL(M)
39+880	117.294	116.6[illegible]	116.519
39+900	117.175	116.594	116.393
39+920	117.077	116.568	116.277
39+940	117.005	116.539	116.157
39+960	116.954	116.350	116.133
39+980	116.907	116.392	116.092
40+000	116.859	116.365	116.027
40+020	116.812	116.429	115.972
40+040	116.765	116.329	115.917
40+060	116.717	116.105	115.861
40+080	116.670	115.981	115.806
40+100	116.622	115.889	115.750
40+120	116.575	116.025	115.694
40+140	116.527	116.162	115.638
40+160	116.480	116.159	115.583
40+180	116.433	115.973	115.528
40+200	116.385	115.855	115.472
40+220	116.338	115.853	115.417
40+240	116.286	115.796	115.357
40+260	116.205	115.630	115.298
40+280	116.091	115.457	115.145
40+300	115.948	115.346	114.995
40+320	115.801	115.233	114.840
40+340	115.654	115.009	114.685
40+360	115.511	114.999	114.534
40+380	115.400	114.844	114.415
40+400	115.327	114.771	114.293

LEGEND

DIRECTION OF WATER FLOW

Revision					
Rev.	Date	Description	Drawn	Checked	Approved

Client:

Bihar State Road Development Corporation Ltd.
Bihar State Road Devp. Corp. Ltd.
PTU, Nawada

DCM (Team)
Bihar State Road Devp. Corp. Ltd.
Nawada

Project Title :
CONSULTANCY SERVICES FOR PREPARATION OF DETAILED PROJECT REPORT (DPR) FOR SH-103 (MANGHWE- GOVINDPUR)

Consultant: HOLTEC CONSULTING PRIVATE LIMITED

Designed	Checked	Approved
SA	SA	JIG
Drawn	Scale	Date
SVR	NTS	DEC. - 2021

Title :
RCC DRAIN PLAN & PROFILE
Km. 39+880 To Km. 40+400

Drawing No. HOL/BSRDCL/DPR/13510/DPP
Rev. R0
Sheet 19
CAD File Ref :
A3